# Product catalogue

**valid from 01. July 2023**

More than just pumps

# Accessories

of drum and progressive cavity pumps

- for use in hazardous areas
- for use in non hazardous areas
- for use in hazardous and non hazardous areas

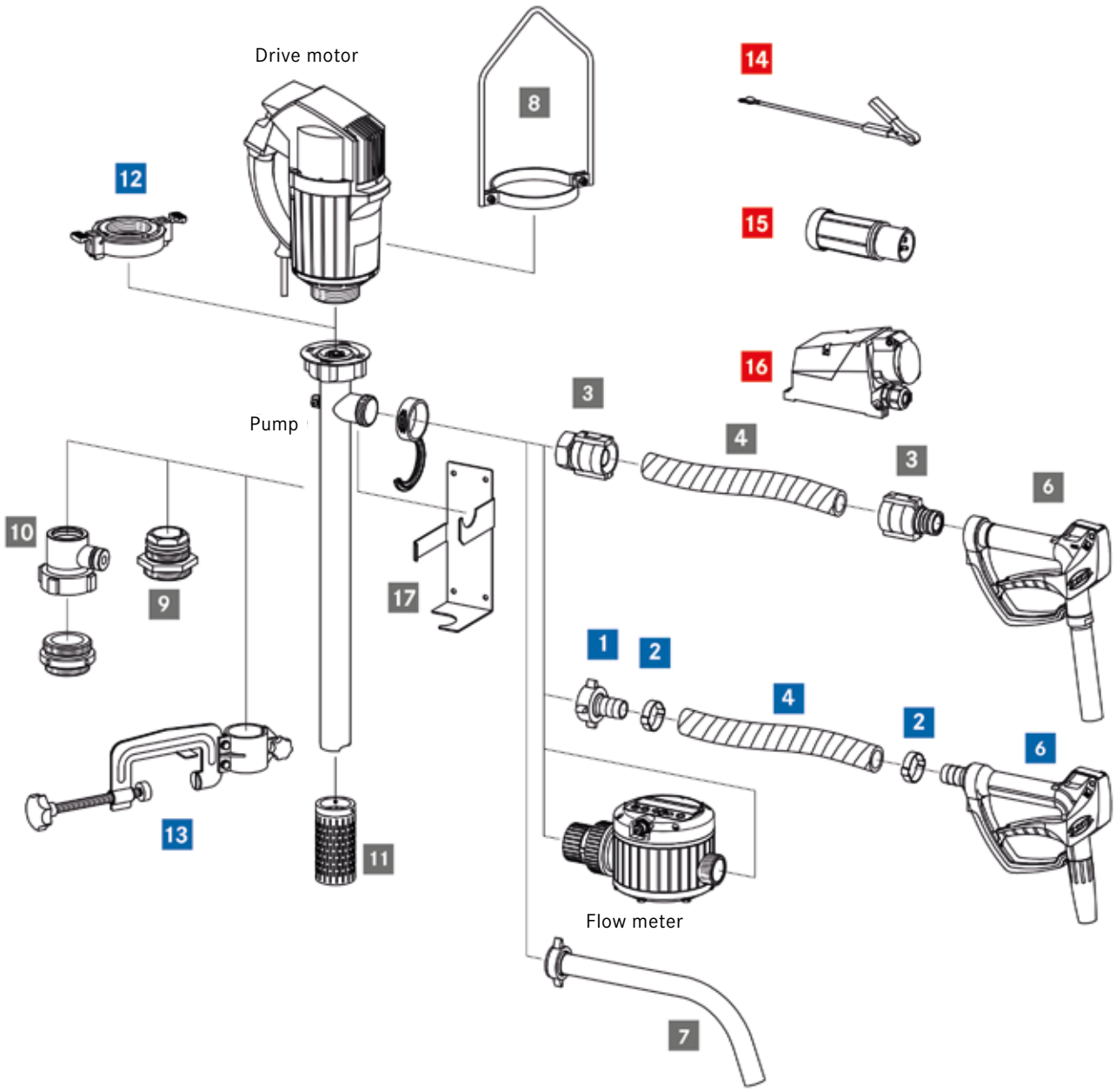


| | | Page |
|---|---|---|
| 1 | Hose connection | 14, 26, 27, 40, 49 |
| 2 | Hose clip | 14, 32 |
| 3 | Swaged hose fitting | 28, 29, 30, 49 |
| 4 | Hose | 31 |
| 5 | Hose kit (3+4 = hose kit) | 30 |
| 6 | Hand nozzle | 14, 33, 34, 40 |
| 7 | Discharge spout | 37, 40, 49, 57 |
| 8 | Carrying handle | 19, 51, 79 |
| 9 | Compression gland | 37 |

| | | Page |
|---|---|---|
| 10 | FLUX fume gland | 36 |
| 11 | Suction strainer | 37, 48 |
| 12 | Quick action coupling | 37 |
| 13 | Attachment clamp | 38, 48 |
| 14 | Earth (ground) wire | 19, 20, 51 |
| 15 | Explosion-proof plug | 19, 51 |
| 16 | Explosion-proof socket | 19, 51 |
| 17 | Wall bracket | 38 |

# Table of contents


**Drum and container pumps**

**Pump kits** 5-10

**JUNIORFLUX / COMBIFLUX (series 300) and accessories** 11-14
For low volumes
F 310 with mechanical seal, F 314 sealless

**Motors and accessories** 15-20
Commutator motors FEM 4070, F 457, F 458, F 460 Ex
Brushless motor FBM 4000 Ex
Three-phase gear motor F 414
Air-operated motors F 416 Ex, F 416-1 Ex, F 416-2 Ex

**Drum and container pumps (series 400)** 21-26
F 424 the sealless, F 425 for 99,98 % drum emptying
F 426 the mixing pump, F 427 can be taken apart completely
F 430 with mechanical seal, drum pumps in special lengths

**Accessories** 27-40
Hose connections, hose couplings,
swaged hose fittings, hose kits,
hoses, 1-Ear hose clips,
hand nozzles, discharge unit, fume glands,
compression glands, outlet tubes, discharge spouts,
suction strainers, attachment clamps,
mixing tubes, flow back stop valves,
accessories in FOOD version

**Progressive cavity pumps, motors and accessories** 41-52
Progressive cavity pumps F 570 and F 580
Progressive cavity pumps horizontal / for dry installation (TR)
Accessories and accessories in FOOD version
Tools for assembly/disassembly

**VISCOFLUX drum emptying systems** 53-58

**Flow meters with FLUXTRONIC® and accessories** 59-71
Nutating disc type FMC 100, FMJ 100, FMC 250
Oval rotor type FMO 101 – FMO 150

**Mixers** 73-74

**Centrifugal immersion pumps, motors and accessories** 75-80
F 620 and F 640
F 706, F 716, F 726

**Air-operated diaphragm pumps and accessories**

**Solid construction** 81-86
RFM 10, RFML 10, RFM 15, RFML 15,
RFM 25, RFML 25, RFM 40

**Moulded pump design** 87-92
FDM 07, FDM 10, FDM 12, FDM 25
FDM 40, FDM 50, FDM 80, FDMH 25

**Certificates** 93

**General terms and conditions of sale** 94


Errors and changes excepted.

# Certificates and conformities

## Certificates and Conformities

**The right solution for every industry**

Certified safety for the most widest range of industries and countries: FLUX products have been developed and certified for use around the world; they comply with the highest demands and safety standards. With FLUX you are always on the safe side everywhere.

| | |
|---|---|
| All FLUX products conform to pertinent fundamental health & safety regulations of the EC Machinery Directive 2006/42/EC and are therefore CE certified. In addition, FLUX products bear the Eurasian EAC mark issued by the customs union of Russia/Belarus/Kazakhstan. | CE EAC |
| Dependent on version, FLUX motors are available with VDE GS, UL or also CSA test certification. | DVE GS UL CSA |
| **For usage in pharmaceutical, food and cosmetics industries** there are the following products available:<br>• pumps with 3A certification<br>• FLUX FOOD pumps conform to EC 1935/2004, suitable for contact with food<br>• products conform to FDA CFR 21 | 3A FDA |
| **For usage in hazardous areas**<br>there are FLUX products available with explosion protection, built and certified according to ATEX Directive 2014/34/EU. | Ex |

**To learn more about our product range contact your local sales partner or go to**
**www.flux-pumps.com**

# Pump kits

# Pump kits

### Pump kit "JUNIORFLUX" for low volumes
### Pump with fixed motor

drum pump in polypropylene, sealless, with hastelloy C shaft, **commutator motor F 310**, 230 V, 50-60 Hz, 230 watt (with integral motor) and hand nozzle PP

- JUNIORFLUX **F 314 PP-25/19** PVC hose DN 13, 1,5 m long

| | immersion length | part no. |
|---|---|---|
| for canister emptying | 700 mm | 10-314 43 007 |
| for drum emptying | 1.000 mm | 10-314 43 010 |

- JUNIORFLUX **F 314 PP-32/25** PVC hose DN 19, 1,5 m long

| | immersion length | part no. |
|---|---|---|
| for drum emptying | 1.000 mm | 10-314 44 010 |

### Pump kit "JUNIORFLUX AdBlue®" * for low volumes

drum pump JUNIORFLUX **F 314 PP/S-32/25** in polypropylene, with stainless steel shaft, sealless, **commutator motor F 310**, 230 V, 50 Hz, 230 watt (with integral motor), PVC hose DN 19, 2 m with hand nozzle PP AdBlue® * version with small outlet Ø 19 mm

| | immersion length | part no. |
|---|---|---|
| for drum emptying | 1.000 mm | 10-314 44 ZV2 |

### Pump kit "COMBIFLUX" for low volumes
### with removable battery motor

drum pump in polypropylene, sealless, hastelloy C shaft, brushless DC, **battery motor FBM-B 3100**, includes 18 V Li-Ion battery, charger 220-240 V, 50-60 Hz, with hand nozzle PP

- COMBIFLUX **FP 314 PP-25/19**, PVC hose DN 13, 1,5 m long

| | immersion length | part no. |
|---|---|---|
| for canister emptying | 700 mm | 10-314 48 807 |
| for drum emptying | 1.000 mm | 10-314 48 810 |

- COMBIFLUX **FP 314 PP-32/25**, PVC hose DN 19, 1,5 m long

| | immersion length | part no. |
|---|---|---|
| for drum emptying | 1.000 mm | 10-314 49 910 |

### Pump kit „COMBIFLUX AdBlue®" * for low volumes
### with removable battery motor

drum pump COMBIFLUX **FP 314 PP/S-32/25** in polypropylene with stainless steel shaft, sealless, brushless DC **battery motor FBM-B 3100**, includes 18 V Li-Ion battery, charger 220-240 V, 50-60 Hz, PVC hose DN 19, 2 m long with hand nozzle PP AdBlue® * version with small outlet Ø 19 mm

| | immersion length | part no. |
|---|---|---|
| for drum emptying | 1.000 mm | 10-314 49 ZV2 |

* AdBlue® is a registered trademark of: Verband der Automobilindustrie e. V. (VDA)

## Pump kits about series F 400

### Pump kit “acids and alkalis”

drum pump in polypropylene with hastelloy C shaft, **commutator motor FEM 4070**, 230 V, 50 Hz, 500 watt with speed control and no-volt-release, PVC hose DN 19, 2 m long with hand nozzle in PP and compression gland PP (G 2" male)

- drum pump **F 430 PP-40/33** with mechanical seal, seal material FKM

| | immersion length | part no. |
|---|---|---|
| for drum emptying | 1.000 mm | 10-407 40 010 |
| for IBC emptying | 1.200 mm | 10-407 40 012 |

- drum pump **F 424 PP-41/36** sealless

| | immersion length | part no. |
|---|---|---|
| for drum emptying | 1.000 mm | 10-407 44 010 |
| for IBC emptying | 1.200 mm | 10-407 44 012 |

### Pump kit “concentrated acids”

drum pump **F 430 PVDF-40/33** in polyvinylidene fluoride with hastelloy C shaft, mechanical seal, seal material FKM, **commutator motor F 458**, 230 V, 50 Hz, 460 watt with no-volt-release, chemical hose DN 19, 2 m long with hand nozzle in PVDF, compression gland PP (G 2" male)

| | immersion length | part no. |
|---|---|---|
| for drum emptying | 1.000 mm | 10-458 60 010 |
| for IBC emptying | 1.200 mm | 10-458 60 012 |

### Pump kit “FES 800” for the transfer of cleaning and disinfecting agents

drum pump **F 424 PP-41/36** in polypropylene with hastelloy C shaft, sealless, with FLUX fume gland (FES), **commutator motor FEM 4070**, 230 V, 50 Hz, 500 watt, with speed control and no-volt-release, PVC hose DN 19, 2 m long and hand nozzle PP

| | immersion length | part no. |
|---|---|---|
| for 60 litre containers | 800 mm | 10-407 44 208 |

### Pump kit “AdBlue®” * for IBC emptying

container pump **F 424 PP/S-41/35 Z** in polypropylene with stainless steel shaft, sealless, **commutator motor FEM 4070**, 230 V, 50 Hz, 500 watt, with speed control and no-volt-release

- with PVC hose DN 19, 3 m long, with hand nozzle in PP and compression gland PP (G 2" male)

| | immersion length | part no. |
|---|---|---|
| for IBC emptying | 1.200 mm | 10-407 44 112 |

- with special hose DN 16, 6 m long, with **hand nozzle with auto-stop function** in AL and compression gland PP (G 2" male)

| | immersion length | part no. |
|---|---|---|
| for IBC emptying | 1.200 mm | 10-407 41 ZV6 |

* AdBlue® is a registered trademark of: Verband der Automobilindustrie e. V. (VDA)

# Pump kits



### Pump kit “petroleum products”

drum pump **F 430 AL-41/38** in aluminium with stainless steel shaft, mechanical seal, seal material NBR, petroleum hose DN 25, 2 m long, hand nozzle AL and compression gland PP (G 2" male)

- with **commutator motor FEM 4070**, 230 V, 50 Hz, 500 watt
  with speed control and no-volt-release

| | immersion length | part no. |
|---|---|---|
| for drum emptying | 1.000 mm | 10-407 10 010 |
| for IBC emptying | 1.200 mm | 10-407 10 012 |

- with **commutator motor F 457**, 230 V, 50 Hz, 800 watt, with no-volt-release

| | immersion length | part no. |
|---|---|---|
| for drum emptying | 1.000 mm | 10-457 10 010 |
| for IBC emptying | 1.200 mm | 10-457 10 012 |

### Pump kit “highly flammable liquids”

drum pump **FP 424 Ex S-43/38** for applications in Zone 0, Ex-marking II 1/2 G Ex h IIB T4...T3 Ga/Gb, in stainless steel with stainless steel shaft, sealless, 2 m earth wire, universal hose DN 21, 2 m long, electrically conductive with brass hose fittings and hand nozzle in brass, compression gland PP electrically conductive (G 2" male)

- with **commutator motor F 460 Ex**, 230 V, 50 Hz, 460 watt, with no-volt-release
  for applications in Zone 0, Ex-marking II 2 G Ex db eb IIC T6 or T5 Gb

| | immersion length | part no. |
|---|---|---|
| for drum emptying | 1.000 mm | 10-460 24 010 |
| for IBC emptying | 1.200 mm | 10-460 24 012 |

- with **commutator motor F 460 Ex EL**, 230 V, 50 Hz, 460 Watt, with no-volt-release,
  with electronic speed adjustment for use in zone 1, Ex marking II 2 G Ex db eb IIC T6 resp. T5 Gb

| | immersion length | part no. |
|---|---|---|
| for drum emptying | 1.000 mm | 10-460 24 110 |
| for IBC emptying | 1.200 mm | 10-460 24 112 |

- with **compressed-air motor F 416 Ex**, 470 watt at 6 bar
  for applications in Zone 0, Ex-marking II 2G Ex h IIC T6 Gb

| | immersion length | part no. |
|---|---|---|
| for drum emptying | 1.000 mm | 10-416 24 010 |
| for IBC emptying | 1.200 mm | 10-416 24 012 |

### Pump kit “99,98 % drum emptying”

drum pump **FP 425 Ex S-41/34** for applications in Zone 0, Ex-marking III 1/2 G Ex h IIB T4...T3 Ga/Gb, in stainless steel with stainless steel shaft, mechanical seal (FKM), 2 m earth wire, universal hose DN 21, 2 m long electrically conductive with stainless steel hose fittings and hand nozzle, compression gland PP electrically conductive (G 2" male)

- with **commutator motor F 460 Ex**, 230 V, 50 Hz, 460 watt with no-volt-release
  for applications in Zone 1, Ex-marking II 2 G Ex db eb IIC T6 or T5 Gb

| | immersion length | part no. |
|---|---|---|
| for drum emptying | 1.000 mm | 10-460 25 010 |
| for IBC emptying | 1.200 mm | 10-460 25 012 |

## Pump kit “universal applications”

drum pump **F 430 S-41/38** in stainless steel, for applications in Zone 0, Ex-marking II 1/2 G IIB T4 with stainless steel shaft, mechanical seal (FKM), 2 m earth wire, universal hose DN 21, 2 m long electrically conductive with stainless steel hose fittings and hand nozzle, compression gland PP electrically conductive (G 2" male)

- with **commutator motor F 460 Ex**, 230 V, 50 Hz, 460 watt with no-volt-release for applications in Zone 1, Ex-marking II 2 G Ex db eb IIC T6 or T5 Gb

| | immersion length | part no. |
|---|---|---|
| for drum emptying | 1.000 mm | 10-460 20 010 |
| for IBC emptying | 1.200 mm | 10-460 20 012 |

- with **compressed-air motor F 416 Ex**, 470 watt at 6 bar for applications in Zone 1, Ex-marking II 2G Ex h IIC T6 Gb

| | immersion length | part no. |
|---|---|---|
| for drum emptying | 1.000 mm | 10-416 20 010 |
| for IBC emptying | 1.200 mm | 10-416 20 012 |

## Pump kit MINIFLUX

drum pump **MINIFLUX S-41/38-136** in stainless steel with stainless steel shaft, mechanical seal FKM, PVC hose DN 19, 2 m long, hand nozzle PP

- with **commutator motor FEM 4070**, 230 V, 50 Hz, 500 watt with speed control and no-volt-release

| | part no. |
|---|---|
| for IBC emptying | 10-407 29 000 |

## Pump kit “fire brigade”

drum pump **F 430 PP-40/33** in polypropylene with hastelloy C shaft, mechanical seal, seal material FKM

- with **commutator motor F 458**, 24 V DC, 410 watt, PVC hose DN 19, 2 m with hand nozzle PP

| | immersion length | part no. |
|---|---|---|
| for drum emptying | 1.000 mm | 10-458 40 610 |

## Pump kit “fire brigade” for industrial applications up to 25.000 mPas

Progressive cavity pump VISCOPOWER **F 570 1200 FKMo FKM SP TS R52 PTFE G16**
F 570 planetary gear, with ratio 1:16
torsion shaft, in stainless steel, with open mechanical seal, seal made of FKM, outer Ø 53 mm, connection Clamp 2“, food and chemical hose DN 32, 2,5 m long, discharge spout in stainless steel

- with **commutator motor F458-1,** 230 V, 700 Watt, IP 55, with no-volt release

| | immersion length | part no. |
|---|---|---|
| or drum emptying | 1.200 mm | 10-458 90 004 |

# Pump kits

## Pump kit for food and pharmaceuticals

**FP 427 S-43/38 FOOD** drum pump in stainless for contact with food in accordance with (EC) 1935/2004 and FDA CFR 21
Sealless, materials in contact with medium in stainless steel, PTFE, FKM, outer tube diameter 43 mm, 1 ½" clamp connection,
food hose DN 25, 2 m long, with hose fittings and hand nozzle in stainless steel, compression gland PP (G 2)

- with **commutator motor F 458,** 230 Volt, 50 Hz, 460 Watt, IP 55 with no-volt release, with special sealing for extreme usage conditions

| | immersion length | part no.. |
|---|---|---|
| for drum emptying | 1.000 mm | 10-458 27 610 |
| for IBC emptying | 1.200 mm | 10-458 27 612 |

## Pump kit for food and pharmaceuticals in Ex version

**FP 430 Ex FOOD S-41/38** drum pump in stainless for contact with food in accordance with (EC) 1935/2004 and FDA CFR 21
Ex marking II 1/2 G IIB T4, for use in zone 0
With mechanical seal in oxide ceramics, PTFE/carbon, seals in FKM, shaft and rotor in stainless steel 316 Ti, outer diameter 41 mm, 1 ½" clamp connection food hose DN 19, 2 m long, with hose fittings and hand nozzle in stainless steel, compression gland PP (G 2)

- with **commutator motor F 460 Ex,** 230 Volt, 50 Hz, 460 Watt, Ex marking II 2 G Ex db eb IIC T6 Gb with no-volt release

| | immersion length | part no.. |
|---|---|---|
| for drum emptying | 1.000 mm | 10-460 20 510 |
| for IBC emptying | 1.200 mm | 10-460 20 512 |

## Pump kit for food and pharmaceuticals up to 25.000 mPas

Progressive cavity pump VISCOPOWER
**F 570 FOOD FKMc FKM SP TS R33 PTFE G16**
for contact with food in accordance with (EC) 1935/2004 and FDA CFR 21
F 570 planetary gear, ratio 1:16, torsion shaft, in stainless steel, with closed mechanical seal, seals made of FKM, outer Ø 53 mm, connection Clamp 2", stator material PTFE, food hose DN 25, 2.5 m long, with hose fittings and discharge spout in stainless steel, compression gland PP (G 2)

- with **commutator motor F 458-1,** 230 Volt, 50 Hz, 700 Watt, IP 55, with no-volt release, connection cable 5 m

| | immersion length | part no.. |
|---|---|---|
| for drum emptying | 1.000 mm | 10-458 90 002 |
| for IBC emptying | 1.200 mm | 10-458 90 003 |

## Pump kit for industrial applications up to 30.000 mPas

Progressive cavity pump VISCOPOWER
**F 570 FKMo FKM SP TS R33 PTFE G16**
F 570 planetary gear, ratio 1:16, torsion shaft, in stainless steel, with closed mechanical seal, seals made of FKM, outer Ø 53 mm, connection Clamp 2" with adapter on G 1 ½" external thread, stator material PTFE, food hose DN 32, 2.5 m long, with hose fittings and discharge spout in stainless steel, compression gland PP (G 2)

- with **commutator motor F 457,** 230 Volt, 50 Hz, 800 Watt, with splash water protection IP 24, with no-volt release, 5 m connection cable

| | immersion length | part no.. |
|---|---|---|
| for drum emptying | 1.000 mm | 10-457 90 002 |
| for IBC emptying | 1.200 mm | 10-457 90 003 |

# JUNIORFLUX/COMBIFLUX (series 300)

for low volumes

# JUNIORFLUX (series 300)

with integral motor

### JUNIORFLUX F 310 with mechanical seal, in polypropylene with hastelloy C shaft

seal in FKM, G1" male discharge connection with **commutator motor F 310**, 230 V, 50 Hz, 230 watt, splash-proof to IP 24. Without hose connections. PP-25 suitable for narrow openings < 32 mm.

- **F 310 PP-25/19**

| immersion length | part no. |
|---|---|
| 500 mm | 10-310 41 005 |
| 700 mm | 10-310 41 007 |
| 1.000 mm | 10-310 41 010 |

- **F 310 PP-32/25**

| immersion length | part no. |
|---|---|
| 500 mm | 10-310 42 005 |
| 700 mm | 10-310 42 007 |
| 1.000 mm | 10-310 42 010 |

### JUNIORFLUX F 314 sealless, with hastelloy C shaft

G1" male discharge connection with **commutator motor F 310**, 230 V, 50 Hz, 230 watt, splash-proof to IP 24. Without hose connections. PP-25 and PVDF-25 models suitable for narrow openings < 32 mm. Not recommended for small solids, abrasive or crystallising liquids.

- **F 314 PP-25/19** in polypropylene

| immersion length | part no. |
|---|---|
| 500 mm | 10-314 41 005 |
| 700 mm | 10-314 41 007 |
| 1.000 mm | 10-314 41 010 |

- **F 314 PP-32/25** in polypropylene

| immersion length | part no. |
|---|---|
| 500 mm | 10-314 42 005 |
| 700 mm | 10-314 42 007 |
| 1.000 mm | 10-314 42 010 |

- **F 314 PVDF-25/19** in polyvinylidene fluoride

| immersion length | part no. |
|---|---|
| 500 mm | 10-314 61 005 |
| 700 mm | 10-314 61 007 |
| 1.000 mm | 10-314 61 010 |

### JUNIORFLUX F 314, sealless, in stainless steel, with stainless steel shaft

G ¾" male discharge connection with **commutator motor F 310**, 230 V, 50 Hz, 230 watt, splash-proof to IP 24, without hose connections. Not recommended for abrasive or crystallising liquids.

- **F 314 S-28/25**

| immersion length | part no. |
|---|---|
| 500 mm | 10-314 21 005 |
| 700 mm | 10-314 21 007 |
| 1.000 mm | 10-314 21 010 |

**Hose connection see page 14**

# COMBIFLUX (series 300)

with separate motor



Drum pump FP 314, sealless, combined with commutator motor (FEM 3070) or battery motor (FBM-B 3100). Not recommended for small solids, abrasive or crystallising liquids.

## COMBIFLUX FP 314, sealless pump

- **FP 314 PP-25/19** in polypropylene with **hastelloy C shaft**, G 1" male discharge connection. Without hose connections

| immersion length | part no. |
|---|---|
| 500 mm | 10-314 45 905 |
| 700 mm | 10-314 45 907 |
| 1.000 mm | 10-314 45 910 |

- **FP 314 PP-32/25** in polypropylene with **hastelloy C shaft**, G 1" male discharge connection. Without hose connections

| immersion length | part no. |
|---|---|
| 500 mm | 10-314 46 905 |
| 700 mm | 10-314 46 907 |
| 1.000 mm | 10-314 46 910 |
| 1.200 mm | 10-314 46 912 |

- **FP 314 PVDF-25/19** in polyvinylidene fluoride with **hastelloy C shaft**, G 1" male discharge connection. Without hose connections

| immersion length | part no. |
|---|---|
| 500 mm | 10-314 65 905 |
| 700 mm | 10-314 65 907 |
| 1.000 mm | 10-314 65 910 |

- **FP 314 S-28/25** in stainless steel with **stainless steel shaft**, G ¾" male discharge connection. Without hose connections

| immersion length | part no. |
|---|---|
| 500 mm | 10-314 26 905 |
| 700 mm | 10-314 26 907 |
| 1,000 mm | 10-314 26 910 |
| 1.200 mm | 10-314 26 912 |

## Drive motors suitable for COMBIFLUX FP 314

- **commutator motor FEM 3070,** 230 watt, splash-proof to IP 24 with 5 m cable and plug

| | part no. |
|---|---|
| 230 V, 50-60 Hz | 10-307 01 000 |
| 240 V, 50 Hz | 10-307 01 001 |
| 120 V, 60 Hz | 10-307 01 002 |
| 110 V, 50-60 Hz | 10-307 01 003 |
| 100 V, 50-60 Hz | 10-307 01 004 |

- **brushless DC battery motor FBM-B 3100, with electronic temperature control,** splash-proof to IP 44, includes Li-Ion 18 V, 2.5 Ah battery

| | part no. |
|---|---|
| **with charger** 220-240 V, 50-60 Hz | 10-301 01 000 |
| **with charger** 100-120 V, 50-60 Hz | 10-301 01 003 |
| **without charger** | 10-301 01 001 |

## Accessories for battery motor FBM-B 3100

- **battery without charger,** type Li-ion, 18 V, 2,5 Ah

| | part no. |
|---|---|
| **B25-3100** | 10-301 02 002 |

- **charger without battery**, BCH-3100, 50-60 Hz

| | part no. |
|---|---|
| 220-240 V | 10-301 02 003 |
| 100-120 V | 10-301 02 004 |

**Hose connection see page 14**

# Accessories

JUNIORFLUX/COMBIFLUX (series 300)

## Hose connections consisting of hose connector and union nut for JUNIORFLUX F 310/F 314 and COMBIFLUX FP 314

| material | nominal Ø | part no. |
|---|---|---|
| PP | DN 13/DN 19 | 10-959 04 135 |
| PVDF | DN 13 | 10-959 04 071 |
| PVDF | DN 19 | 10-959 04 072 |
| S | DN 13 | 10-959 04 133 |
| S | DN 19 | 10-959 04 147 |

## PVC hoses

| | operating pressure max. | part no. |
|---|---|---|
| DN 13 outer Ø 20 mm (with fabric lining) | 10 bar | 10-001 10 008 |
| DN 19 outer Ø 27 mm (with steel wire-helix) | 5 bar | 10-001 10 040 |

## Stepless 1-ear hose clips for PVC hoses

| | part no. |
|---|---|
| DN 13 | 10-959 13 237 |
| DN 19 | 10-959 13 241 |

## Hand nozzles

| material | nominal Ø | outlet-Ø | part no. |
|---|---|---|---|
| PP | DN 13 | 11 mm | 10-001 13 034 |
| PP | DN 19 | 11 mm | 10-001 13 039 |
| PP | DN 19 | 22 mm | 10-001 12 500 |
| PVDF | DN 19 | 22 mm | 10-001 12 501 |
| S | DN 19 | 28 mm | 10-001 12 541 |
| S | G 3/4 | 28 mm | 10-001 12 555 |

## Hose kit for JUNIORFLUX/COMBIFLUX

PVC hose 1,5 m long with hand nozzle in PP (spout Ø 11 mm), hose connection and hose clip

| connection | part no. |
|---|---|
| DN 13 | 10-001 10 825 |
| DN 19 | 10-001 10 846 |

## Discharge spout for JUNIORFLUX/COMBIFLUX

Material: PP

| connection | part no. |
|---|---|
| union nut G 1 | 10-959 07 008 |

## Flow meter FMT 120 PP with interlocked wheel impeller in the measuring chamber

in conjunction with our JUNIORFLUX/COMBIFLUX pumps. Construction in PP with fibreglass, not ex-proof, outlet connection G 1" male, O-ring PTFE

| inlet connection female | part no. |
|---|---|
| G 1 | 10-A05 00 101 |
| G 1 ¼ | 10-A05 00 102 |

## Drum adaptor for safety attachment of the JUNIORFLUX/COMBIFLUX pumps in canisters or plastic drums

| | material | pump-Ø | part no. |
|---|---|---|---|
| canister bunghole 40 - 70 mm | PVC | 32 mm | 10-001 14 081 |
| canister bunghole 40 - 70 mm | PP/PVC | 28 mm | 10-001 14 079 |
| canister bunghole 40 - 70 mm | PP/PVC | 25 mm | 10-001 14 080 |
| canister bunghole 40 - 70 mm | PVDF/PVC | 28 mm | 10-001 14 082 |
| canister bunghole 40 - 70 mm | PVDF/PVC | 25 mm | 10-001 14 083 |

# Drum and container pumps

series 400

# Drive motors

for drum and container pumps, series 400
and progressive cavity pumps VISCOPOWER F 570

commutator motor
FEM 4070

commutator motor
F 457
F 457 EL

commutator motor
F 458
F 458 EL
F 458-1

commutator motor
F 460 Ex
F 460-1 Ex
F 460 Ex EL

brushless motor
FBM 4000 Ex

F 400

| Type | capacity (watt) | speed control | protection class | cable | plug | with no-volt-release | without no-volt-release |
|---|---|---|---|---|---|---|---|
| | | | | | | part no. | part no. |

## motors with 230 volt, 50 Hz

| | | | | | | | |
|---|---|---|---|---|---|---|---|
| **FEM 4070** | 500 | yes | IP 24 | 5 m | CEE 7/17 | 10-407 01 000* | 10-407 01 001* |
| | | | | 5 m | - | 10-407 01 004* | 10-407 01 005* |
| **F 457** | 800 | no | IP 24 | 5 m | CEE 7/17 | 10-457 01 005* | 10-457 01 002* |
| | | | | 5 m | - | 10-457 01 039* | 10-457 01 038* |
| **F 457 EL** | 800 | yes | IP 24 | 5 m | CEE 7/17 | 10-457 01 003* | 10-457 01 041* |
| | | | | 5 m | - | 10-457 01 040* | - |
| **F 458** | 460 | no | IP 55 | 5 m | CEE 7/7 | 10-458 00 034 | 10-458 00 031 |
| | | | | - | | 10-458 00 041 | 10-458 00 036 |
| **F 458 EL** | 460 | yes | IP 55 | 5 m | CEE 7/7 | 10-458 00 047 | - |
| | | | | - | | 10-458 00 048 | - |
| **F 458-1** | 700 | no | IP 55 | 5 m | CEE 7/7 | 10-458 01 026 | 10-458 01 025 |
| | | | | 5 m | - | 10-458 01 031 | 10-458 01 028 |
| **F 460 Ex** | 460 | no | IP 55 | 5 m | CEE 7/7 | 10-460 00 047 | 10-460 00 044 |
| | | | | 5 m | - | 10-460 00 059 | 10-460 00 058 |
| | | | | - | | 10-460 00 054 | 10-460 00 049 |
| **F 460 Ex EL** | 460 | yes | IP 55 | 5 m | CEE 7/7 | 10-460 00 067 | - |
| | | | | 5 m | - | 10-460 00 069 | - |
| | | | | - | | 10-460 00 068 | - |
| **F 460-1 Ex** | 700 | no | IP 55 | 5 m | CEE 7/7 | 10-460 01 028 | 10-460 01 027 |
| | | | | 5 m | - | 10-460 01 038 | 10-460 01 037 |
| | | | | - | | 10-460 01 033 | 10-460 01 030 |

## motors with 230 Volt, 50-60 Hz

| | | | | | | | |
|---|---|---|---|---|---|---|---|
| **FEM 4070** | 500 | yes | IP 24 | 5 m | CEE 7/17 | 10-407 01 023* | 10-407 01 025* |
| **F 457** | 800 | no | IP 24 | 5 m | CEE 7/17 | – | 10-457 01 037* |
| **F 458** | 460 | no | IP 55 | 5 m | CEE 7/7 | – | 10-458 00 043 |
| **F 458-1** | 700 | no | IP 55 | 5 m | CEE 7/7 | – | 10-458 01 031 |
| **F 460 Ex** | 460 | no | IP 55 | 5 m | CEE 7/7 | – | 10-460 00 060 |
| **F 460-1 Ex** | 700 | no | IP 55 | 5 m | CEE 7/7 | – | 10-460 01 039 |
| **FBM 4000 Ex** | 600 | yes | IP 55 | 5 m | CEE 7/7 | 10-400 01 000* | – |
| | | | | 5 m | - | 10-400 01 001* | – |
| | | | | - | - | 10-400 01 002* | – |

## motors with 230-240 Volt, 50-60 Hz for ambient temperature to 60 °C in Ex area

| | | | | | | | |
|---|---|---|---|---|---|---|---|
| **F 460 Ex HT** | 420-470 | no | IP 55 | 5 m | - | 10-460 00 039* | 10-460 00 063 |
| **F 460 Ex HT** | 420-470 | no | IP 55 | - | - | 10-460 00 066* | 10-460 00 065 |

* Motors without anti-rotation device

commutator motor
FEM 4070

commutator motor
F 457
F 457 EL

commutator motor
F 458
F 458 EL
F 458-1

commutator motor
F 460 Ex
F 460 Ex UL

| Type | capacity (watt) | speed control | protection class | cable | plug | with no-volt-release | without no-volt-release |
|---|---|---|---|---|---|---|---|
| | | | | | | part no. | part no. |

## motors with 240 Volt, 50 Hz

| | | | | | | | |
|---|---|---|---|---|---|---|---|
| **FEM 4070** | 500 | ja | IP 24 | 5 m | CEE 7/17 | 10-407 01 008* | 10-407 01 009* |
| | | | | 5 m | - | 10-407 01 010* | 10-407 01 011* |
| **F 457** | 800 | nein | IP 24 | 5 m | CEE 7/17 | 10-457 01 006* | 10-457 01 007* |
| | | | | 5 m | - | 10-457 01 013* | 10-457 01 012* |
| **F 457 EL** | 800 | ja | IP 24 | 5 m | CEE 7/17 | 10-457 01 008* | - |
| | | | | 5 m | - | 10-457 01 016* | - |
| **F 458** | 460 | nein | IP 55 | 5 m | - | 12-458 30 004 | 12-458 30 003 |
| | | | | - | | 10-458 00 040 | 10-458 00 035 |
| **F 458-1** | 700 | nein | IP 55 | 5 m | - | 12-458 30 008 | 12-458 30 009 |
| | | | | - | | 10-458 01 030 | 10-458 01 027 |
| **F 460 Ex** | 460 | nein | IP 55 | 5 m | CEE 7/7 | 12-460 30 008 | - |
| | | | | 5 m | - | - | 12-460 30 016 |
| | | | | - | | 10-460 00 053 | 10-460 00 038 |
| **F 460-1 Ex** | 700 | nein | IP 55 | 5 m | - | 12-460 30 021 | 12-460 30 022 |
| | | | | - | | 10-460 01 032 | 10-460 01 029 |

## motors with 120 Volt, 60 Hz

| | | | | | | | |
|---|---|---|---|---|---|---|---|
| **FEM 4070** | 500 | yes | COF ENC 2 | 5 m | NEMA 1-15P | 10-407 01 012* | 10-407 01 013* |
| | | | IP 24 | 5 m | NEMA 1-15P | 10-407 01 014* | 10-407 01 015* |
| **F 457** | 800 | no | IP 24 | 5 m | NEMA 1-15P | 10-457 01 004* | 10-457 01 000* |
| **F 457 EL** | 800 | yes | IP 24 | 5 m | NEMA 1-15P | 10-457 01 001* | - |
| **F 458** | 460 | no | COF CSA ENC 3 TP | 5 m | NEMA 5-15P | - | 10-458 00 044 |
| **F 458-1** | 700 | no | COF CSA ENC 3 TP | 5 m | NEMA 5-15P | - | 10-458 01 034 |
| **F 460-1 Ex UL** | 700 | no | - | 5 m | - | - | 10-460 01 040 |
| **F 460 Ex UL** | 460 | no | - | 5 m | - | - | 10-460 00 062 |

## motors with 100 Volt, 50-60 Hz

| | | | | | | | |
|---|---|---|---|---|---|---|---|
| **FEM 4070** | 450 | yes | IP 24 | 5 m | JIS C8303 | 10-407 01 020* | 10-407 01 021* |
| **F 460 Ex** | 460 | no | IP 55 | 5 m | - | - | 12-460 30 024 |

## motors with 42 Volt, 50 Hz

| | | | | | | | |
|---|---|---|---|---|---|---|---|
| **F 460 Ex** | 460 | no | IP 55 | 5 m | - | 12-460 30 010 | - |

* Motors without anti-rotation device

Ex-marking: II 2 G Ex db eb IIC T6 bzw. T5 Gb

# Drive motors

for drum and container pumps, series 400
and progressive cavity pumps VISCOPOWER F 570

commutator motor
FEM 4070

commutator motor
F 457
F 457 EL

commutator motor
F 458
F 458-1

commutator motor
F 460 Ex
F 460-1 Ex

Ex-marking:
II 2 G Ex
db eb IIC T6
resp. T5 Gb

| Type | capacity (watt) | speed control | protection class | cable | plug | with no-volt-release | without no-volt-release |
|---|---|---|---|---|---|---|---|
| | | | | | | part no. | part no. |
| **motors with 110 Volt, 50 Hz** | | | | | | | |
| **FEM 4070** | 500 | ja | IP 24 | 5 m | CEE 7/17 | 10-407 01 016* | 10-407 01 017* |
| | | | | 5 m | - | 10-407 01 018* | 10-407 01 019* |
| **F 457** | 800 | nein | IP 24 | 5 m | CEE 7/17 | 10-457 01 009* | 10-457 01 010* |
| | | | | 5 m | - | 10-457 01 015* | 10-457 01 014* |
| **F 457 EL** | 800 | ja | IP 24 | 5 m | CEE 7/17 | 10-457 01 011* | - |
| | | | | 5 m | - | 10-457 01 017* | - |
| **F 458** | 460 | nein | IP 55 | 5 m | - | 12-458 30 005 | - |
| | | | | - | | 10-458 00 042 | - |
| **F 458-1** | 700 | nein | IP 55 | 5 m | CEE 7/7 | 12-458 30 006 | - |
| | | | | 5 m | - | 12-458 30 007 | - |
| | | | | - | | 10-458 01 032 | - |
| **F 460 Ex** | 460 | nein | IP 55 | 5 m | - | 12-460 30 009 | - |
| | | | | - | | 10-460 00 055 | - |
| **F 460-1 Ex** | 700 | nein | IP 55 | 5 m | CEE 7/7 | 12-460 30 011 | - |
| | | | | 5 m | - | 12-460 30 012 | - |
| | | | | - | | 10-460 01 034 | - |
| **motors with 110 Volt, 50-60 Hz** | | | | | | | |
| **F 458** | 460 | nein | IP 55 | 5 m | - | - | 12-458 30 002 |
| | | | | - | | - | 10-458 00 037 |
| **F 458-1** | 700 | nein | IP 55 | 5 m | - | - | 10-458 01 033 |
| | | | | - | | - | 10-458 01 029 |
| **F 460 Ex** | 460 | nein | IP 55 | 5 m | - | - | 12-460 30 019 |
| | | | | - | | - | 10-460 00 050 |
| **F 460-1 Ex** | 700 | nein | IP 55 | 5 m | - | - | 12-460 30 020 |
| | | | | - | | - | 10-460 01 031 |
| **motors with 24 Volt, DC** | | | | | | | |
| **F 458** | 410 | no | IP 55 | 5 m | - | - | 10-458 00 032 |
| | | | | - | | - | 10-458 00 038 |
| **F 460 Ex** | 410 | no | IP 55 | 5 m | - | - | 10-460 00 045 |
| | | | | - | | - | 10-460 00 051 |
| **motors with 12 Volt, DC** | | | | | | | |
| **F 458** | 230 | no | IP 55 | 5 m | - | - | 10-458 00 033 |
| | | | | - | | - | 10-458 00 039 |
| **F 460 Ex** | 230 | no | IP 55 | 5 m | - | - | 10-460 00 046 |
| | | | | - | | - | 10-460 00 052 |

* Motors without anti-rotation device

# Accessories for motors

for drum and container pumps, series 400

## Accessories for motors F 457, F 458, F 460 Ex and FBM 4000 Ex

image similar

- **CEE plug**, for applications in Zone 1, 3-poles, 200-250 V

| System | part no. |
|---|---|
| CEAG, Ex-marking: II 2 G Ex db eb IIC/IIB+H2 T6 | 10-937 01 030 |
| Stahl, Ex-marking II 2 G Ex db eb IIC T6 Gb | 10-937 01 018 |

image similar

- **CEE socket**, for applications in Zone 1, 3-poles, 200-250 V

| System | part no. |
|---|---|
| CEAG, Ex-marking: II 2 G Ex eb IIC T6 | 10-937 50 041 |
| Stahl, Ex-marking II 2 G Ex db eb IIC T6 Gb | 10-937 50 022 |

- **earth wire** with crocodile clip

| | cable cross-section | length | clamp | part no. |
|---|---|---|---|---|
| spiral cable (yellow) | 3 mm² | 4 m | stainless steel | 10-931 90 023 |
| cable (green/yellow) | 4 mm² | 2 m | steel | 10-931 90 015 |

- **carrying handle**, Rilsan-coated

| | part no. |
|---|---|
| F 457 | 10-001 10 533 |
| F 458, F 458-1 | 10-001 10 500 |

- **carrying handle**, cpl. with earth wire

| | part no. |
|---|---|
| F 460 Ex, FBM 4000 Ex | 10-001 10 596 |

- **inertia hoist**, rope length 2 m

| | part no. |
|---|---|
| carrying force 9 – 14 kg | 10-001 21 000 |
| carrying force 16 – 21 kg | 10-001 21 002 |

## Three-phase gear motors for drum and container pumps

image similar

- **F 414**, 230/400 V, 50 Hz, jet-proof to IP 55, **with motor protection switch**

| | part no. |
|---|---|
| 0,55 kW energy efficiency class IE2 | 10-414 01 145 |
| 0,75 kW energy efficiency class IE3 | 10-414 01 147 |
| 1,1 kW energy efficiency class IE3 | 10-414 01 149 |

- **F 414**, 230/400 V, 50 Hz, jet-proof to IP 55, **with cable terminal box**

| | part no. |
|---|---|
| 0,55 kW energy efficiency class IE2 | 10-414 01 144 |
| 0,75 kW energy efficiency class IE3 | 10-414 01 146 |
| 1,1 kW energy efficiency class IE3 | 10-414 01 148 |

## Accessories for three-phase gear motors F 414

- **carrying handle**

| | part no. |
|---|---|
| stainless steel | 10-001 10 582 |

- **power supply cable**

| | part no. |
|---|---|
| pre-assembled with sleeve and Cekon plug, 5 m long | 10-934 08 020 |
| pre-assembled with sleeve without plug, 5 m long | 10-934 08 025 |
| per meter | 10-934 08 901 |
| electrical mounting commutator motor | 10-Z05 00 MKS |
| electrical mounting three-phase motor | 10-Z05 00 DKS |

- **cekon plug**

| | part no. |
|---|---|
| 5-poles | 10-937 01 014 |
| 5-poles with commutator | 10-937 01 035 |

- **motor protection switch**, jet-proof to IP 55, with 2 cable entry ports

| | part no. |
|---|---|
| 1,30 – 2,00 A | 10-936 06 168 |
| 1,80 – 3,00 A | 10-936 06 169 |
| 2,80 – 4,60 A | 10-936 06 170 |

# Drive motors

for drum and container pumps, series 400

F 400

## Compressed-air motors F 416 Ex for drum and container pumps

470 watt at 6 bar, 14 liter/sec. air consumption, with anti-rotation device, for applications in Zone 1, Ex-marking II 2G Ex h IIC T6 Gb.
Require dry, clean, lubricated air.

- **F 416 Ex**

| | part no. |
|---|---|
| with operating valve (adjustable and lockable) | 10-416 00 131 |

- **F 416-1 Ex**

| | part no. |
|---|---|
| no valve, for automatic control | 10-416 00 132 |

- **F 416-2 Ex**

| | part no. |
|---|---|
| with ball valve, to regulate speed | 10-416 00 133 |

## Accessories for compressed-air motors F 416 Ex

- **filter-regulator-lubricator unit** G ¼" female connection

| | part no. |
|---|---|
| for non hazardous areas | 10-001 10 100 |
| explosion-proof | 10-001 10 113 |



- **compressed-air hose**

| | part no. |
|---|---|
| DN 10, electrically conductive, EPDM, black, outer Ø 17.5 mm | 10-001 10 913 |
| DN 10, PVC, outer Ø 17 mm | 10-001 10 071 |

- **hose coupling with hose connection in brass**

| | part no. |
|---|---|
| DN 10 | 10-959 13 066 |

- **coupling in brass**

| | part no. |
|---|---|
| DN 7,2 - G ¼" male | 10-959 13 210 |

- **threaded nipple in brass for hose coupling**

| | part no. |
|---|---|
| DN 10, G ¼" male | 10-959 13 065 |

- **hose nozzle (brass)**

| | part no. |
|---|---|
| DN 10, G ¼" male | 10-959 05 022 |

- **plug-in sleeve in brass**

| | part no. |
|---|---|
| DN 10 | 10-959 13 209 |

- **1-ear hose clip**

| | part no. |
|---|---|
| ø 14,8; clamping range 8-18 mm | 10-959 13 237 |

- **earth wire** with crocodile clip

| | cable cross-section | length | clamp | part no. |
|---|---|---|---|---|
| spiral cable (yellow) | 3 mm² | 4 m | stainless steel | 10-931 90 023 |
| cable (green/yellow) | 4 mm² | 2 m | steel | 10-931 90 015 |

- **fine filter sound absorber** with oil separator

| | part no. |
|---|---|
| complete with mounting bracket | 10-947 15 005 |

- **exhaust air hose kit** for compressed-air motors F 416
  PVC hose DN13, 5 m long

| | part no. |
|---|---|
| connections G ½ - G ½ A (both male threads) for compressed-air motors F 416 **with** additional fine filter silencer with oil separator | 10-001 10 886 |

**Drum pump FP 424, sealless,** not recommended for small solids, abrasive or crystallising liquids. 50 mm diameter options for high flow applications. G 1¼" male discharge connection, with FLUX-Clip, without hose connection.

## in stainless steel (S)

for applications in Zone 0, Ex-marking II 1/2 G Ex h IIB T4...T3 Ga/Gb, with zone separation

- **FP 424 Ex S-43/38, FKM seal**, stainless steel shaft

| immersion length | part no. |
|---|---|
| 700 mm | 10-424 22 007 |
| 1.000 mm | 10-424 22 010 |
| 1.200 mm | 10-424 22 012 |

- **FP 424 Ex S-43/38, FEP seal**, stainless steel shaft

| immersion length | part no. |
|---|---|
| 700 mm | 10-424 29 307 |
| 1.000 mm | 10-424 29 310 |
| 1.200 mm | 10-424 29 312 |

- **FP 424 Ex S-43/38, EPDM seal**, stainless steel shaft

| immersion length | part no. |
|---|---|
| 1.000 mm | 10-424 28 010 |
| 1.200 mm | 10-424 28 012 |

- **FP 424 Ex S-43/37 Z, FKM seal**, stainless steel shaft **(for increased pumping head)**

| immersion length | part no. |
|---|---|
| 700 mm | 10-424 22 107 |
| 1.000 mm | 10-424 22 110 |
| 1.200 mm | 10-424 22 112 |

- **FP 424 Ex S-43/37 Z, FEP seal**, stainless steel shaft **(for increased pumping head)**

| immersion length | part no. |
|---|---|
| 700 mm | 10-424 29 407 |
| 1.000 mm | 10-424 29 410 |
| 1.200 mm | 10-424 29 412 |

- **FP 424 Ex S-50/45 Z, FKM seal**, stainless steel shaft **(for increased pumping head)**

| immersion length | part no. |
|---|---|
| 700 mm | 10-424 22 207 |
| 1.000 mm | 10-424 22 210 |
| 1.200 mm | 10-424 22 212 |

- **FP 424 Ex S-50/45 Z, FEP seal**, stainless steel shaft **(for increased pumping head)**

| immersion length | part no. |
|---|---|
| 700 mm | 10-424 29 507 |
| 1.000 mm | 10-424 29 510 |
| 1.200 mm | 10-424 29 512 |

FP 424 Ex S

## in stainless steel (S), HT version

for application in Zone 0, for ambient temperature to **+60 °C**, Ex-marking II 1/2 G Ex h IIB T4...T3 Ga/Gb, with zone separation

- **FP 424 Ex (HT) S-43/38 FKM** seal, stainless steel shaft

| immersion length | part no. |
|---|---|
| 1.000 mm | 10-424 22 310 |
| 1.200 mm | 10-424 22 312 |

- **FP 424 Ex (HT) S-43/37 Z FKM** seal, stainless steel shaft **(for increased pumping head)**

| immersion length | part no. |
|---|---|
| 1.000 mm | 10-424 22 410 |
| 1.200 mm | 10-424 22 412 |

- **FP 424 Ex (HT) S-50/45 Z FKM** seal, stainless steel shaft **(for increased pumping head)**

| immersion length | part no. |
|---|---|
| 1.000 mm | 10-424 22 510 |
| 1.200 mm | 10- 424 22 512 |

## in polypropylene (PP)

- **F 424 PP-41/36, FKM seal, hastelloy C shaft**

| immersion length | part no. |
|---|---|
| 700 mm | 10-424 40 007 |
| 1.000 mm | 10-424 40 010 |
| 1.200 mm | 10-424 40 012 |

- **F 424 PP-41/36, FKM seal, titanium shaft**

| immersion length | part no. |
|---|---|
| 700 mm | 10-424 40 707 |
| 1.000 mm | 10-424 40 710 |
| 1.200 mm | 10-424 40 712 |

- **F 424 PP-41/36, EPDM seal, hastelloy C shaft**

| immersion length | part no. |
|---|---|
| 700 mm | 10-424 48 007 |
| 1.000 mm | 10-424 48 010 |
| 1.200 mm | 10-424 48 012 |

Other seal materials available on request

illustration with hose connection (not included)

* AdBlue® is a registered trademark of: Verband der Automobilindustrie e. V. (VDA)

# Drum and container pumps, series 400



## in polypropylene (PP)

- **F 424 PP-41/35 Z, FKM seal, hastelloy C shaft (for increased pumping head)**

| immersion length | part no. |
|---|---|
| 700 mm | 10-424 40 107 |
| 1.000 mm | 10-424 40 110 |
| 1.200 mm | 10-424 40 112 |

- **F 424 PP-50/38 , FKM seal, hastelloy C shaft**

| immersion length | part no. |
|---|---|
| 700 mm | 10-424 40 207 |
| 1.000 mm | 10-424 40 210 |
| 1.200 mm | 10-424 40 212 |

- **F 424 PP/S-41/35 Z, FKM seal, stainless steel shaft, AdBlue®** version*, free from non-ferrous materials

| immersion length | part no. |
|---|---|
| 1.000 mm | 10-424 40 510 |
| 1.200 mm | 10-424 40 512 |

- **F 424 PP-50/43 Z, FKM seal, hastelloy C shaft (for increased pumping head)**

| immersion length | part no. |
|---|---|
| 700 mm | 10-424 40 307 |
| 1.000 mm | 10-424 40 310 |
| 1.200 mm | 10-424 40 312 |

F 424 PP

## in polyvinylidene fluoride (PVDF)

- **F 424 PVDF-41/36, FKM seal**, hastelloy C shaft

| immersion length | part no. |
|---|---|
| 700 mm | 10-424 60 007 |
| 1.000 mm | 10-424 60 010 |
| 1.200 mm | 10-424 60 012 |

- **F 424 PVDF-41/35Z, FKM seal**, hastelloy C shaft **(for increased pumping head)**

| immersion length | part no. |
|---|---|
| 700 mm | 10-424 60 107 |
| 1.000 mm | 10-424 60 110 |
| 1.200 mm | 10-424 60 112 |

- **F 424 PVDF-41/36 FFKM seal**, hastelloy C shaft

| immersion length | part no. |
|---|---|
| 700 mm | 10-424 69 007 |
| 1.000 mm | 10-424 69 010 |
| 1.200 mm | 10-424 69 012 |

- **F 424 PVDF-50/38, FKM seal**, hastelloy C shaft

| immersion length | part no. |
|---|---|
| 700 mm | 10-424 60 207 |
| 1.000 mm | 10-424 60 210 |
| 1.200 mm | 10-424 60 212 |

F 424 PVDF

## Drum pump F 425 for 99,98 % drum emptying

with mechanical seal, G 1¼" male discharge connection, with FLUX-Clip, without hose connection, stainless steel and hastelloy C version: for applications in Zone 0,
Ex-marking stainless steel version: II 1/2 G Ex h IIB T4...T3 Ga/Gb
Ex-marking hastelloy C version: II 1/2 G IIB T4

- **FP 425 Ex S-41/34** in **stainless steel, stainless steel shaft** and **FKM** seal (with zone separation)

| immersion length | part no. |
|---|---|
| 700 mm | 10-425 22 008 |
| 1.000 mm | 10-425 22 011 |
| 1.200 mm | 10-425 22 013 |

- **FP 425 Ex S-41/34** in **stainless steel, stainless steel shaft, EPDM seal** (with zone separation)

| immersion length | part no. |
|---|---|
| 1.000 mm | 10-425 28 011 |
| 1.200 mm | 10-425 28 013 |

- **F 425 PP-50/34** in **Hastelloy C, Hastelloy C shaft, EPDM seal**

| immersion length | part no. |
|---|---|
| 1.200 mm | 10-425 48 051 |
| 1.500 mm | 10-425 48 053 |

- **F 425 HC-40/34** in **hastelloy C, hastelloy C shaft** and **FFKM** seal

| immersion length | part no. |
|---|---|
| 1.200 mm | 10-425 30 007 |
| 1.500 mm | 10-425 30 008 |

- **FP 425 Ex S-41/34** in **stainless steel, stainless steel shaft** and **FFKM** seal (with zone separation)

| immersion length | part no. |
|---|---|
| 1.000 mm | 10-425 29 111 |
| 1.200 mm | 10-425 29 113 |

- **FP 425 Ex S-41/34Z** in **stainless steel, stainless steel shaft** and **FKM** seal **(for increased pumping head)** (with zone separation)

| immersion length | part no. |
|---|---|
| 1.000 mm | 10-425 22 031 |
| 1.200 mm | 10-425 22 033 |

- **F 425 PP-50/34** in **polypropylene, hastelloy C shaft** and **FKM** seal

| immersion length | part no. |
|---|---|
| 700 mm | 10-425 40 048 |
| 1.000 mm | 10-425 40 051 |
| 1.200 mm | 10-425 40 053 |

FP 425 Ex S

F 425 PP

Other seal materials available on request
Additional cost for silicone-free version on request (only for stainless steel pumps available)

illustration with hose connection (not included)

## Drum pump F 426 for mixing and pumping

with mechanical seal, G 1¼" male discharge connection, with FLUX-Clip, without hose connection
stainless steel version: for applications in Zone 0, Ex-marking II 1/2 G IIB T4

- **F 426 S-41/38** in **stainless steel**, **stainless steel shaft** and **FKM** seal

| immersion length | part no. |
|---|---|
| 1.000 mm | 10-426 20 010 |
| 1.200 mm | 10-426 20 012 |

- **F 426 S-41/38** in **stainless steel**, **stainless steel shaft** and **FFKM** seal

| immersion length | part no. |
|---|---|
| 1.000 mm | 10-426 29 010 |
| 1.200 mm | 10-426 29 012 |

F 426 S

- **Accessories for F 426 S**
  sealing washer for closing the hose connector during mixing

| | part no. |
|---|---|
| sealing washer, S 316 Ti | 10-925 69 011 |
| union nut, S | 10-907 90 002 |
| flat seal, PE | 10-925 64 002 |

- **F 426 PP-50/33** in **polypropylene**, **hastelloy C shaft** and **FKM** seal

| immersion length | part no. |
|---|---|
| 1.000 mm | 10-426 40 001 |
| 1.200 mm | 10-426 40 002 |

- **Accessories for F 426 PP**
  sealing washer for closing the hose connector during mixing

| | part no. |
|---|---|
| sealing washer, PP | 10-925 69 000 |
| union nut, PP | 10-907 90 024 |
| flat seal, PTFE | 10-925 64 003 |

F 426 PP

F 400

## Drum pump F 427, can be taken apart completely

sealless, easy to strip for sterile applications, stainless steel shaft, with FLUX-Clip, without hose connection

### in stainless steel

- **F 427 S3-43/38**, **G 1¼" male** discharge connection

| immersion length | part no. |
|---|---|
| 700 mm | 10-427 20 307 |
| 1.000 mm | 10-427 20 310 |
| 1.200 mm | 10-427 20 312 |

- **hose connection** with **G 1¼" female** union nut

| | part no. |
|---|---|
| DN 25 | 10-959 04 063 |

- **F 427 S4-43/38**, **Rd 58 x 1/6** thread connection

| immersion length | part no. |
|---|---|
| 700 mm | 10-427 20 407 |
| 1.000 mm | 10-427 20 410 |
| 1.200 mm | 10-427 20 412 |

- **hose connection** with **Rd 58 x 1/6** union nut

| | part no. |
|---|---|
| DN 25 | 10-959 04 115 |

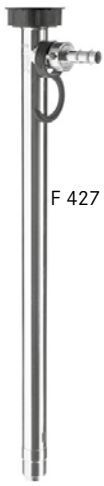
F 427

### in stainless steel, FOOD version

- suitable for food contact according to Regulation (EC) 1935/2004 and FDA CFR 21
  **FP 427 S-43/38 FOOD** in stainless steel, **1½" clamp** connection (other connections on request)

| immersion length | part no. |
|---|---|
| 700 mm | 10-427 20 607 |
| 1.000 mm | 10-427 20 610 |
| 1.200 mm | 10-427 20 612 |

Accessories for FOOD version see page 40

FP 427 FOOD

### in stainless steel, 3A version

- **F 427 S3A-43/38** with **1½" clamp** connection

| immersion length | part no. |
|---|---|
| 700 mm | 10-427 20 207 |
| 1.000 mm | 10-427 20 210 |
| 1.200 mm | 10-427 20 212 |

- **hose connection** with **clamp** connection **1½"**

| | part no. |
|---|---|
| DN 19 | 10-959 04 138 |

illustration with hose connection (not included)

**Drive motors see page 16–20, other hose connections see page 27**

# Drum and container pumps, series 400



## Drum pump F 430

with mechanical seal, G 1¼" male discharge connection, with FLUX-Clip, without hose connection.
Suitable for pumping liquids containing small solids or crystallising liquids.

F 430 AL

### in aluminium, stainless steel shaft and NBR seal

- **F 430 AL-41/38**

| immersion length | part no. |
|---|---|
| 700 mm | 10-430 10 107 |
| 1.000 mm | 10-430 10 110 |
| 1.200 mm | 10-430 10 112 |

- **F 430 AL-50/38**

| immersion length | part no. |
|---|---|
| 700 mm | 10-430 10 307 |
| 1.000 mm | 10-430 10 310 |
| 1.200 mm | 10-430 10 312 |

- **F 430 AL-41/37 Z (for increased pumping head)**

| immersion length | part no. |
|---|---|
| 700 mm | 10-430 10 407 |
| 1.000 mm | 10-430 10 410 |
| 1.200 mm | 10-430 10 412 |

### in stainless steel, stainless steel shaft

for applications in Zone 0, Ex-marking II 1/2 G IIB T4

F 430 S

- **F 430 S-41/38**, **FKM** seal

| immersion length | part no. |
|---|---|
| 700 mm | 10-430 20 107 |
| 1.000 mm | 10-430 20 110 |
| 1.200 mm | 10-430 20 112 |

- **F 430 S-41/38**, **EPDM** seal

| immersion length | part no. |
|---|---|
| 1.000 mm | 10-430 28 110 |
| 1.200 mm | 10-430 28 112 |

- **F 430 S-50/38**, **FKM** seal

| immersion length | part no. |
|---|---|
| 1.000 mm | 10-430 20 310 |

- **F 430 S-41/38**, **FFKM** seal

| immersion length | part no. |
|---|---|
| 1.000 mm | 10-430 29 110 |
| 1.200 mm | 10-430 29 112 |

- **F 430 S-41/37 Z**, **FKM** seal
  **(for increased pumping head)**

| immersion length | part no. |
|---|---|
| 700 mm | 10-430 20 407 |
| 1.000 mm | 10-430 20 410 |
| 1.200 mm | 10-430 20 412 |

- **F 430 S-50/45 Z**, **FKM** seal
  **(for increased pumping head)**

| immersion length | part no. |
|---|---|
| 700 mm | 10-430 20 207 |
| 1.000 mm | 10-430 20 210 |
| 1.200 mm | 10-430 20 212 |

### in stainless steel, FOOD version, stainless steel shaft

for applications in Zone 0, Ex-marking II 1/2 G IIB T4
suitable for food contact according to Regulation (EC) 1935/2004 and FDA CFR 21

- **FP 430 Ex S-41/38 FOOD** in stainless steel, **FKM** seal, **1½" clamp connection** (other connections on request)

| immersion length | part no. |
|---|---|
| 700 mm | 10-430 20 507 |
| 1.000 mm | 10-430 20 510 |
| 1.200 mm | 10-430 20 512 |

- **FP 430 Ex S-41/38 FOOD** in stainless steel, **FFKM** seal, **1½" clamp connection** (other connections on request)

| immersion length | part no. |
|---|---|
| 700 mm | 10-430 29 607 |
| 1.000 mm | 10-430 29 610 |
| 1.200 mm | 10-430 29 612 |

FFKM O-rings on request
Accessories for FOOD version see page 40

### in hastelloy C, hastelloy C shaft and FFKM seal

for applications in Zone 0, Ex-marking II 1/2 G IIB T4

- **F 430 HC-40/38**

| immersion length | part no. |
|---|---|
| 700 mm | 10-430 30 107 |
| 1.000 mm | 10-430 30 110 |
| 1.200 mm | 10-430 30 112 |

F 430 HC

illustration with hose connection (not included)

Other seal materials available on request. Additional cost for silicone-free version on request.
**Drive motors see page 16–20, hose connections see page 27, mixing tubes see page 39**

## Drum pump F 430

with mechanical seal, hastelloy C shaft, G 1¼" male discharge connection, with FLUX-Clip, without hose connection.
Suitable for pumping liquids containing small solids or crystallising liquids. 50 mm diameter options for high flow applications.

### in polypropylene (PP)

- **F 430 PP-40/33, FKM** seal

| immersion length | part no. |
|---|---|
| 700 mm | 10-430 40 107 |
| 1.000 mm | 10-430 40 110 |
| 1.200 mm | 10-430 40 112 |

- **F 430 PP-40/33 Z, FKM** seal **(for increased pumping head)**

| immersion length | part no. |
|---|---|
| 700 mm | 10-430 40 407 |
| 1.000 mm | 10-430 40 410 |
| 1.200 mm | 10-430 40 412 |

- **F 430 PP-50/43 Z, FKM** seal **(for increased pumping head)**

| immersion length | part no. |
|---|---|
| 700 mm | 10-430 40 207 |
| 1.000 mm | 10-430 40 210 |
| 1.200 mm | 10-430 40 212 |

- **F 430 PP-40/33, EPDM** seal

| immersion length | part no. |
|---|---|
| 1.000 mm | 10-430 48 110 |
| 1.200 mm | 10-430 48 112 |

- **F 430 PP-50/38, FKM** seal

| immersion length | part no. |
|---|---|
| 700 mm | 10-430 40 307 |
| 1.000 mm | 10-430 40 310 |
| 1.200 mm | 10-430 40 312 |

F 430 PP

F 400

### in polyvinylidene fluoride (PVDF)

- **F 430 PVDF-40/33, FKM** seal

| immersion length | part no. |
|---|---|
| 700 mm | 10-430 60 107 |
| 1.000 mm | 10-430 60 110 |
| 1.200 mm | 10-430 60 112 |

- **F 430 PVDF-40/33 Z, FKM** seal **(for increased pumping head)**

| immersion length | part no. |
|---|---|
| 700 mm | 10-430 60 407 |
| 1.000 mm | 10-430 60 410 |
| 1.200 mm | 10-430 60 412 |

- **F 430 PVDF-50/38, FKM** seal

| immersion length | part no. |
|---|---|
| 700 mm | 10-430 60 307 |
| 1.000 mm | 10-430 60 310 |
| 1.200 mm | 10-430 60 312 |

- **F 430 PVDF-40/33, FFKM** seal

| immersion length | part no. |
|---|---|
| 1.000 mm | 10-430 69 110 |
| 1.200 mm | 10-430 69 112 |

- **F 430 PVDF-50/43 Z, FKM** seal **(for increased pumping head)**

| immersion length | part no. |
|---|---|
| 700 mm | 10-430 60 207 |
| 1.000 mm | 10-430 60 210 |
| 1.200 mm | 10-430 60 212 |

F 430 PVDF

Other seal material on request

**Drive motors see page 16–20, hose connections see page 27, mixing tubes see page 39**

illustration with hose connection (not included)

## Container pump F 430 in polypropylene with hastelloy C shaft

with mechanical seal, seal material FKM, G 1¼" male discharge connection, wih FLUX-Clip, without hose connection

- **F 430 PP-100/50**

| immersion length | part no. |
|---|---|
| 1.000 mm | 10-430 40 510 |
| 1.200 mm | 10-430 40 512 |
| 1.500 mm | 10-430 40 515 |

- **screw top**
  to secure the pump in the container in connection with a compression gland or a fume gland (part numbers see page 36)

| nominal Ø | part no. |
|---|---|
| DN 150 | 10-001 14 063 |
| DN 225 | 10-001 14 064 |

## Centrifugal pumps for horizontal and vertical installation (dry installation – outside of drum/container)

- **F 430 S-41/38 TR,** stainless steel, with stainless steel shaft, Ex-marking: II 2 G c IIB TX, without hose connection

| connection | seal | part no. |
|---|---|---|
| inlet: G 2" male parallel<br>outlet: G 1 ¼" male | FKM | 10-430 20 002 |
| inlet: clamp 2"<br>outlet: clamp 1 ½" | FEP/FFKM | 10-430 29 012 |

- **F 430 PP-40/33 TR** in polypropylene with hastelloy C shaft

| connection | seal | part no. |
|---|---|---|
| inlet: G 2" male<br>outlet: G 1¼" male | FKM | 10-430 40 002 |

- **hose connections** complete for suction side for F 430 TR

| | nominal Ø | part no. |
|---|---|---|
| in stainless steel, with nickel-plated brass G 2" female union nut | DN 32 | 10-959 04 059 |
| in polypropylene, with PVC G 2" female union nut | DN 32 | 10-959 04 010 |
| | DN 38 | 10-959 04 011 |

- **MINIFLUX IBC pump,** in stainless steel, with stainless steel shaft, Ex-marking: II 2G c IIB TX

| connection | seal | part no. |
|---|---|---|
| inlet:<br>union nut S 60 x 6, PP<br>discharge connection: G 1¼" male | FKM, NBR | 10-430 20 003 |
| | FFKM, NBR | 10-430 29 003 |

- Accessories for **MINIFLUX**

| | part no. |
|---|---|
| fixation MINIFLUX, wire cable in stainless steel, length 3 m, hook in brass, nickel-plated | 10-001 10 430 |
| union nut Rd 60x6, in stainless steel, connection drum pump/IBC | 10-907 90 083 |
| union nut Rd 65x1/6, in stainless steel, connection drum pump/motor | 10-907 90 011 |
| O-ring FFKM, FDA | 10-925 75 063 |
| connecting piece S to FMC 100 / FMO 104 / FMO 110 | 10-430 21 043 |

**Drive motors see page 16–20, hose connections see page 27**

illustration with hose connection (are not included)

## Hose connections

- **stainless steel**, with nickel-plated **brass** G 1¼" female union nut

| | part no. |
|---|---|
| DN 19 | 10-959 04 061 |
| DN 25 | 10-959 04 041 |
| DN 32 | 10-959 04 042 |

- **aluminium**, with nickel-plated **brass** G 1¼" female union nut

| | part no. |
|---|---|
| DN 19 | 10-959 04 050 |
| DN 25 | 10-959 04 039 |
| DN 32 | 10-959 04 040 |

- **stainless steel**, with **stainless steel** G 1¼" female union nut

| | part no. |
|---|---|
| DN 19 | 10-959 04 062 |
| DN 25 | 10-959 04 063 |
| DN 32 | 10-959 04 064 |

- **hastelloy C**, with **stainless steel** G 1¼" female union nut

| | part no. |
|---|---|
| DN 25 | 10-959 04 043 |

- **polypropylene**, with G 1¼" female union nut

| | part no. |
|---|---|
| DN 13 | 10-959 04 081 |
| DN 19 | 10-959 04 053 |
| DN 25 | 10-959 04 052 |
| DN 32 | 10-959 04 054 |

- **polyvinylidene fluoride**, with G 1¼" female union nut

| | part no. |
|---|---|
| DN 13 | 10-959 04 082 |
| DN 19 | 10-959 04 101 |
| DN 25 | 10-959 04 102 |
| DN 32 | 10-959 04 103 |

F 400

## Hose couplings and safety binding

**quick hose couplings**
consisting of 3 components: female part (hose side), male part and drum pump connector (please order all components at the same time)

- **polypropylene**, with FKM seal

| | part no. |
|---|---|
| connector: G 1" male - G 1¼" female | 10-959 06 179 |
| male part: G 1" female | 10-959 13 213 |
| female part with DN 25 hose connection | 10-959 13 220 |

- **bronze**, with FKM seal

| | part no. |
|---|---|
| connector: G 1" male - G1¼" female | 10-959 06 019 |
| male part: G 1" female | 10-959 13 211 |
| female part with DN 25 hose connection | 10-959 13 219 |

- **stainless steel**, with FKM seal

| | part no. |
|---|---|
| connector: G 1" male - G 1¼" female | 10-959 06 144 |
| male part: G 1" female | 10-959 13 215 |
| female part with DN 25 hose connection | 10-959 13 221 |

**bracket clamp**
pressed aluminium yesws for female part (bronze or stainless steel) of quick hose couplings

| | for hoses | part no. |
|---|---|---|
| yesws, aluminium | DN 25 | 10-959 13 218 |
| yesws, stainless steel | DN 38 | 10-959 13 365 |
| hose connector, S for clamp connection 1 ½" | DN 38 | 10-959 05 174 |

# Accessories

for drum and container pumps, series 400

F 400

## Swaged hose fittings for the connection of pump and hose – recommended for use with lined hoses

(consisting of hose connection ① and bracket clamp or ferrule type with union nut ②)

- **with hose connection brass** (for use in hazardous areas)

| seal | bracket clamp | nominal Ø | version | outer Ø hose | part no. |
|---|---|---|---|---|---|
| PUR | – | DN 13 – G ½" female | HE | 21 mm | 10-959 13 130 |
| PUR | – | DN 19 – G 1" female | HE | 27 mm | 10-959 13 116 |
| - | – | DN 19 – G 1" male | HE | 27 mm | 10-959 13 118 |
| PUR | – | DN 19 – G 1¼" female | HE | 27 mm | 10-959 13 192 |
| PUR | AL nickel-plated | DN 19 – G 1" female | SL | 30 – 33 mm | 10-959 13 157 |
| PUR | AL nickel-plated | DN 19 – G 1¼" female | SL | 30 – 33 mm | 10-959 13 180 |
| PUR | AL nickel-plated | DN 21 – G 1¼" female | SL | 30 – 33 mm | 10-959 13 230 |
| PUR | – | DN 25 – G 1" female | HE | 34 mm | 10-959 13 097 |
| - | – | DN 25 – G 1" male | HE | 34 mm | 10-959 13 099 |
| PUR | – | DN 25 – G 1¼" female | HE | 34 mm | 10-959 13 098 |
| PUR | AL nickel-plated | DN 25 – G 1" female | SF | 36 – 38 mm | 10-959 13 158 |
| PUR | AL nickel-plated | DN 25 – G 1" male | SF | 36 – 38 mm | 10-959 13 159 |
| PUR | AL nickel-plated | DN 25 – G 1¼" female | SF | 36 – 38 mm | 10-959 13 140 |
| - | AL nickel-plated | DN 25 – G 1¼" male | SF | 36 – 38 mm | 10-959 13 188 |
| PUR | AL nickel-plated | DN 32 – G 1¼" female | SF | 43 – 45 mm | 10-959 13 014 |
| PUR | AL nickel-plated | DN 32 – G 1½" female | SF | 43 – 45 mm | 10-959 13 015 |
| PUR | AL nickel-plated | DN 38 – G 1½" female | SF | 50 – 52 mm | 10-959 13 143 |
| PUR | brass | G 1¼" female – G 1" male | reducer | | 10-959 06 019 |
| PUR | brass | G 1½" female – G 1¼" male | reducer | | 10-959 06 002 |

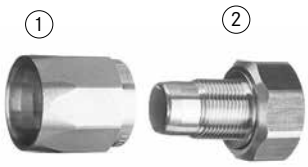


HE Version
ferrule type with union nut

SF Version
with pinned safety clamps
(Spannfix)

- **with hose connection stainless steel** (for use in hazardous areas)

| seal | bracket clamp | nominal Ø | version | outer Ø hose | part no. |
|---|---|---|---|---|---|
| PTFE | AL nickel-plated | DN 13 – G ½" female | SL | 22 – 24 mm | 10-959 13 178 |
| PTFE | AL nickel-plated | DN 19 – G 1" female | SL | 30 – 33 mm | 10-959 13 160 |
| PTFE | AL nickel-plated | DN 19 – G 1¼" female | SL | 30 – 33 mm | 10-959 13 181 |
| PTFE | AL nickel-plated | DN 21 – G 1" female | SL | 30 – 33 mm | 10-959 13 233 |
| PTFE | AL nickel-plated | DN 21 – G 1¼" female | SL | 30 – 33 mm | 10-959 13 231 |
| PTFE | AL nickel-plated | DN 25 – G 1" female | SF | 36 – 38 mm | 10-959 13 161 |
| - | AL nickel-plated | DN 25 – G 1" male | SF | 36 – 38 mm | 10-959 13 162 |
| PTFE | AL nickel-plated | DN 25 – G 1¼" female | SF | 36 – 38 mm | 10-959 13 144 |
| PTFE | AL nickel-plated | DN 32 – G 1¼" female | SF | 43 – 45 mm | 10-959 13 145 |
| PTFE | AL nickel-plated | DN 32 – G 1½" female | SF | 43 – 45 mm | 10-959 13 146 |
| PTFE | AL nickel-plated | DN 38 – G 1½" female | SF | 50 – 52 mm | 10-959 13 147 |
| PTFE | S | G 1½" female – G 1¼" male | reducer | | 10-959 06 005 |

SL Version
with bolted clamps (Spannloc)

- **with hose connection stainless steel, PFA coated** (for use in hazardous areas)

| seal | bracket clamp | nominal Ø | version | outer Ø hose | part no. |
|---|---|---|---|---|---|
| PFA coated | AL nickel-plated | DN 25 – G 1 ¼ female | SF | 36 - 38 mm | 10-959 13 234 |
| PFA coated | AL nickel-plated | DN 25 – G 1 female | SL | 36 - 39 mm | 10-959 13 386 |
| PFA coated | AL nickel-plated | DN 25 – G 1 male | SL | 36 - 39 mm | 10-959 13 387 |

- **with hose connection polypropylene**

| seal | bracket clamp | nominal Ø | version | outer Ø hose | part no. |
|---|---|---|---|---|---|
| PE | S | DN 13 – G 1" female | SL | 22 – 24 mm | 10-959 13 317 |
| PE | S | DN 13 – G 1¼" female | SL | 22 – 24 mm | 10-959 13 321 |
| PE | S | DN 19 – G 1" female | SL | 30 – 33 mm | 10-959 13 319 |
| PE | S | DN 19 – G 1¼" female | SL | 30 – 33 mm | 10-959 13 323 |
| PE | S | DN 21 – G 1¼" female | SL | 30 – 33 mm | 10-959 13 325 |
| PE | S | DN 25 – G 1¼" female | SL | 36 – 39 mm | 10-959 13 327 |

- **with hose connection polyvinylidene fluoride**

| seal | bracket clamp | nominal Ø | version | outer Ø hose | part no. |
|---|---|---|---|---|---|
| PTFE | S | DN 13 – G 1" female | SL | 22 – 24 mm | 10-959 13 318 |
| PTFE | S | DN 19 – G 1" female | SL | 30 – 33 mm | 10-959 13 320 |
| PTFE | S | DN 19 – G 1¼" female | SL | 30 – 33 mm | 10-959 13 324 |
| PTFE | S | DN 21 – G 1¼" female | SL | 30 – 33 mm | 10-959 13 326 |
| PTFE | S | DN 25 – G 1¼" female | SL | 36 – 39 mm | 10-959 13 328 |

## Swaged hose fittings for the connection of hose and FLUX hand nozzle

- **for hand nozzle PP/FKM** part no. 10-001 12 556 with connection Ø 28 mm

| hose connection | seal | bracket clamp | nominal Ø | version | outer Ø hose | part no. |
|---|---|---|---|---|---|---|
| PP | FKM | AL nickel-plated | DN 25 | SF | 36 – 38 mm | 10-959 13 309 |
| PP | FKM | S | DN 19 | SL | 30 – 33 mm | 10-959 13 330 |
| PP | FKM | S | DN 21 | SL | 30 – 33 mm | 10-959 13 335 |
| PP | FKM | S | DN 25 | SF | 36 – 38 mm | 10-959 13 340 |

hand nozzle PP
(see page 33)

- **for hand nozzle PP/EPDM** part no. 10-001 12 557 with connection Ø 28 mm

| hose connection | seal | bracket clamp | nominal Ø | version | outer Ø hose | part no. |
|---|---|---|---|---|---|---|
| PP | EPDM | AL nickel-plated | DN 21 | SL | 30 – 33 mm | 10-959 13 305 |
| PP | EPDM | AL nickel-plated | DN 25 | SF | 36 – 38 mm | 10-959 13 310 |
| PP | EPDM | S | DN 19 | SL | 30 – 33 mm | 10-959 13 331 |
| PP | EPDM | S | DN 21 | SL | 30 – 33 mm | 10-959 13 336 |
| PP | FKM | S | DN 25 | SL | 36 – 39 mm | 10-959 13 341 |



- **for hand nozzle PVDF/FKM** part no. 10-001 12 558 with connection Ø 28 mm

| hose connection | seal | bracket clamp | nominal Ø | version | outer Ø hose | part no. |
|---|---|---|---|---|---|---|
| PVDF | FKM | AL nickel-plated | DN 13 | SL | 22 – 24 mm | 10-959 13 298 |
| PVDF | FKM | AL nickel-plated | DN 19 | SL | 30 – 33 mm | 10-959 13 301 |
| PVDF | FKM | S | DN 13 | SL | 22 – 24 mm | 10-959 13 329 |
| PVDF | FKM | S | DN 19 | SL | 30 – 33 mm | 10-959 13 332 |
| PVDF | FKM | S | DN 21 | SL | 30 – 33 mm | 10-959 13 337 |
| PVDF | FKM | S | DN 25 | SL | 36 – 39 mm | 10-959 13 342 |

hand nozzle PVDF
(see page 33)

- **for hand nozzle PVDF/EPDM** part no. 10-001 12 559 with connection Ø 28 mm

| hose connection | seal | bracket clamp | nominal Ø | version | outer Ø hose | part no. |
|---|---|---|---|---|---|---|
| PVDF | EPDM | S | DN 19 | SL | 30 – 33 mm | 10-959 13 333 |
| PVDF | EPDM | S | DN 25 | SL | 36 – 39 mm | 10-959 13 343 |

- **for hand nozzle PVDF/FFKM** part no. 10-001 12 560 with connection Ø 28 mm

| hose connection | seal | bracket clamp | nominal Ø | version | outer Ø hose | part no. |
|---|---|---|---|---|---|---|
| PVDF | FFKM | S | DN 19 | SL | 30 – 33 mm | 10-959 13 334 |
| PVDF | FFKM | S | DN 21 | SL | 30 – 33 mm | 10-959 13 339 |
| PVDF | FFKM | S | DN 25 | SL | 36 – 39 mm | 10-959 13 344 |

## Bracket clamp with corrosion protection

in stainless steel ECTFE coated with screws and nuts in HC for hose connection PP or PVDF

| version | part no. |
|---|---|
| DN 25 | 10-959 13 347 |

## Swaged hose fittings for the connection of hose and hand nozzle

- **for hand nozzle MS** part no. 10-001 12 340 with connection Ø 32 mm

| hose connector | seal | bracket clamp | nominal Ø | version | outer Ø hose | part no. |
|---|---|---|---|---|---|---|
| brass | FEP | – | DN 19 | HE | 27 mm | 10-959 13 134 |
| brass | FEP | AL nickel-plated | DN 19 | SL | 31 mm | 10-959 13 191 |
| brass | FEP | AL nickel-plated | DN 21 | SL | 31 mm | 10-959 13 229 |
| brass | FEP | – | DN 25 | HE | 34 mm | 10-959 13 137 |
| brass | FEP | AL nickel-plated | DN 25 | SF | 37 mm | 10-959 13 152 |

hand nozzle MS
(see page 34)

HE = version ferrule type with union nut
SF = version with pinned safety clamps (Spannfix)
SL = version with bolted clamps (Spannloc)

## Swaged hose fittings for the connection of hose and hand nozzle

- **for hand nozzle S** part no. 10-001 12 549 with connection Ø 28 mm

| hose connector | seal | bracket clamp | nominal Ø | version | outer Ø hose | part no. |
|---|---|---|---|---|---|---|
| S | FEP | AL nickel-plated | DN 19 | SL | 31 mm | 10-959 13 258 |
| S | FEP | AL nickel-plated | DN 21 | SL | 31 mm | 10-959 13 259 |
| S | FEP | AL nickel-plated | DN 25 | SF | 37 mm | 10-959 13 260 |

- **for hand nozzle S** part no. 10-001 12 550 with connection Ø 28 mm and FLUX discharge unit with spring valve FAEplus S part no. 10-001 12 576

| hose connector | seal | bracket clamp | nominal Ø | version | outer Ø hose | part no. |
|---|---|---|---|---|---|---|
| S | FEP | AL nickel-plated | DN 19 | SL | 31 mm | 10-959 13 276 |
| S | FEP | AL nickel-plated | DN 21 | SL | 31 mm | 10-959 13 277 |
| S | FEP | AL nickel-plated | DN 25 | SF | 37 mm | 10-959 13 278 |

hand nozzle S
(see page 34)

## Bonding work
of the chosen hose fittings and hose

| bonding work on both sides | part no. |
|---|---|
| including testing for electrical conductivity | 10-000 00 100 |
| without testing for electrical conductivity (with PP/PVDF hose connector) | 10-000 00 102 |

| bonding work on one side, without testing for electrical conductivity | part no. |
|---|---|
| swaged hose fittings with MS/S hose connector | 10-000 00 103 |
| swaged hose fittings with PP/PVDF hose connector | 10-000 00 104 |

## Hose kits with G 1¼" female drum pump connectors
and connection to **brass hand nozzle** part no. 10-001 12 340 with connection Ø 32 mm, electrically conductive with swaged hose fitting in aluminium nickel-plated

- **petroleum hose kit**

| | length | part no. |
|---|---|---|
| DN 19 | 2 m long | 10-001 10 091 |
| | 3 m long | 10-001 10 092 |
| DN 25 | 2 m long | 10-001 10 081 |
| | 3 m long | 10-001 10 082 |

- **universal hose kit**

| | length | part no. |
|---|---|---|
| DN 21 | 2 m long | 10-001 10 839 |
| | 3 m long | 10-001 10 840 |

- **hose kit for food and chemistry**

| | length | part no. |
|---|---|---|
| DN 19 | 2 m long | 10-001 10 089 |
| | 3 m long | 10-001 10 090 |
| DN 25 | 2 m long | 10-001 10 811 |
| | 3 m long | 10-001 10 812 |

hand nozzle MS
(see page 34)

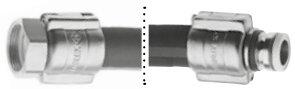

hose kit

## Hose kits with G 1¼" female drum pump connectors
and connection to **stainless steel hand nozzle** part no. 10-001 12 549 with connection Ø 28 mm, electrically conductive with swaged hose fitting in aluminium nickel-plated

- **universal hose kit**

| | length | part no. |
|---|---|---|
| DN 21 | 2 m long | 10-001 10 870 |
| | 3 m long | 10-001 10 871 |

- **hose kit for food and chemistry**

| | length | part no. |
|---|---|---|
| DN 19 | 2 m long | 10-001 10 873 |
| | 3 m long | 10-001 10 874 |
| DN 25 | 2 m long | 10-001 10 868 |
| | 3 m long | 10-001 10 869 |

hand nozzle S
(see page 34)

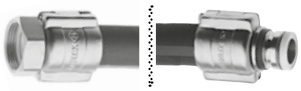

hose kit

## Hose lines with hand nozzle with G 1 ¼" female connection to drum pump

- with **hand nozzle PP** (part no. 10-001 12 500 with FKM seal, 10-001 12 506 with EPDM seal), PVC- hose DN 19, 2 m, hose connection PP

| seal | part no. |
|---|---|
| FKM | 10-001 10 813 |
| EPDM | 10-001 10 847 |

- with **handn nozzle PVDF** (part no. 10-001 12 558), hose for food and chemistry DN 19, 2 m, hose connector PVDF, bracket clamp AL nickel-plated

| seal | part no. |
|---|---|
| FKM | 10-001 10 814 |

- with **hand nozzle AL** (part no. 10-001 12 172), petroleum hose DN 25, 2 m, hose connector aluminum, union nut brass

| seal | part no. |
|---|---|
| NBR | 10-001 10 815 |

- with **hand nozzle S** (part no 10-001 12 549), universal hose DN 21, 2 m, hose connector S, bracket clamp AL nickel-plated, electrically conductive integrated

| seal | part no. |
|---|---|
| PTFE/FEP | 10-001 10 872 |

- with **hand nozzle MS** (part no. 10-001 12 340), universal hose DN 21, 2 m, hose connector brass, bracket clamp AL nickel-plated, electrically conductive integrated

| seal | part no. |
|---|---|
| PTFE | 10-001 10 845 |

## Hose lines with hand nozzle FOOD with 1 ½“ Clamp connection

- with **hand nozzle S** (part no. 10-001 12 568), food hose DN 25, 2 m, hose connector S

| seal | part no. |
|---|---|
| FKM | 10-001 10 898 |

- with **hand nozzle S** (part no. 10-001 12 568), hose for food and chemistry DN 19, 2 m, hose connector S, electrically conductive integrated

| seal | part no. |
|---|---|
| FKM | 10-001 10 899 |

## Hoses without inliner

for use with hose connections or swaged hose fittings

- **PVC hose** with fabric lining
  also suitable for food contact according to Regulation (EC) 1935/2004

| | operating pressure max. | part no. |
|---|---|---|
| DN 13 outer Ø 20 mm | 10 bar | 10-001 10 008 |

- **PVC hose with steel wire-helix**
  also suitable for food contact according to Regulation (EC) 1935/2004

| | operating pressure max. | part no. |
|---|---|---|
| DN 19 outer Ø 27 mm | 5 bar | 10-001 10 040 |
| DN 25 outer Ø 33 mm | 5 bar | 10-001 10 041 |
| DN 32 outer Ø 41 mm | 4,5 bar | 10-001 10 042 |
| DN 38 outer Ø 47 mm | 4 bar | 10-001 10 043 |
| DN 50 outer Ø 60 mm | 3 bar | 10-001 10 044 |

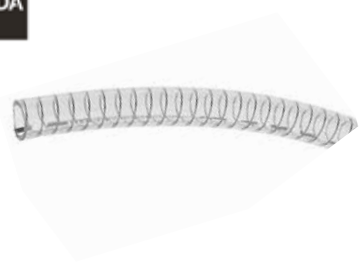

- **petroleum hose**
  electrically conductive Ω to EN 12115:2011
  material inside: NBR black

| | operating pressure max. | part no. |
|---|---|---|
| DN 13 outer Ø 21 mm | 10 bar | 10-001 10 076 |
| DN 19 outer Ø 27 mm | 10 bar | 10-001 10 065 |
| DN 25 outer Ø 34 mm | 10 bar | 10-001 10 002 |

electrically conductive Ω/T to EN 12115:2011
material inside: NBR black

| | operating pressure max. | part no. |
|---|---|---|
| DN 32 outer Ø 44 mm | 25 bar | 10-001 10 003 |
| DN 38 outer Ø 51 mm | 25 bar | 10-001 10 004 |

- **special food-grade hose**
  suitable for food contact according to Regulation (EC) 1935/2004 and FDA CFR 21
  material inside: NBR white

| | operating pressure max. | part no. |
|---|---|---|
| DN 25 outer Ø 37 mm | 16 bar | 10-001 10 022 |
| DN 38 outer Ø 51 mm | 16 bar | 10-001 10 023 |

## Hoses with inliner
for use with swaged hose fittings

- **universal hose**, electrically conductive Ω to EN 12115:2011
  material inside: fluoropolymer THV seamless

| | operating pressure max. | part no. |
|---|---|---|
| DN 21 outer Ø 31 mm | 16 bar | 10-001 10 838 |

- **hose for food and chemistry**, electrically conductive Ω/T to EN 12115:2011
  suitable for food contact according to Regulation (EC) 1935/2004 and FDA CFR 21
  material inside: ultra-high molecular PE transparent

| | operating pressure max. | part no. |
|---|---|---|
| DN 13 outer Ø 22 mm | 16 bar | 10-001 10 085 |
| DN 19 outer Ø 31 mm | 16 bar | 10-001 10 037 |
| DN 25 outer Ø 37 mm | 16 bar | 10-001 10 030 |
| DN 32 outer Ø 43 mm | 16 bar | 10-001 10 036 |
| DN 38 outer Ø 51 mm | 16 bar | 10-001 10 086 |

- **PTFE hose**, electrically conductive Ω/T-type acc. to EN 12115
  suitable for food contact according to Regulation (EC) 1935/2004 and 10/2001
  and FDA material inside: PTFE

| | operating pressure max. | part no. |
|---|---|---|
| DN 19 outer Ø 31 mm | 16 bar | 10-001 10 892 |
| DN 25 outer Ø 37 mm | 16 bar | 10-001 10 893 |

## Stepless 1-ear hose clip
in stainless steel 316 Ti for use with hose connection

- for **PVC hose**

| | outer Ø | part no. |
|---|---|---|
| DN 13 | 18 mm | 10-959 13 237 |
| DN 19 | 27 mm | 10-959 13 241 |
| DN 25 | 34 mm | 10-959 13 243 |
| DN 32 | 41 mm | 10-959 13 248 |
| DN 38 | 47 mm | 10-959 13 251 |
| DN 50 | 60 mm | 10-959 13 255 |

- for **petroleum hose**

| | outer Ø | part no. |
|---|---|---|
| DN 13 | 21 mm | 10-959 13 239 |
| DN 19 | 27 mm | 10-959 13 371 |
| DN 25 | 34 mm | 10-959 13 243 |
| DN 32 | 43 mm | 10-959 13 249 |
| DN 38 | 51 mm | 10-959 13 252 |

- for **special food-grade hose**

| | outer Ø | part no. |
|---|---|---|
| DN 25 | 37 mm | 10-959 13 246 |
| DN 38 | 51 mm | 10-959 13 254 |

**Forceps** to attach the 1-ear hose clip

| | part no. |
|---|---|
| | 10-961 40 811 |

## Non explosion-proof hand nozzles

### Hand nozzles with hose connection for use with hoses without inliner (see page 31)

- **hand nozzle PP** (polypropylene) **with small outlet**

| nominal Ø | seal | outlet Ø | part no. |
|---|---|---|---|
| DN 13 | FKM | 6 mm | 10-001 13 001 |
| DN 13 | FKM | 11 mm | 10-001 13 034 |
| DN 19 | FKM | 11 mm | 10-001 13 039 |
| DN 19 | FKM | 20 mm | 10-001 13 000 |
| DN 25 | FKM | 20 mm | 10-001 13 035 |

- **hand nozzle PP** (polypropylene) **with swivel inlet**, outlet Ø 25 mm

| nominal Ø | seal | part no. |
|---|---|---|
| DN 19 | FKM | 10-001 12 500 |
| DN 25 | FKM | 10-001 12 504 |
| DN 19 | EPDM | 10-001 12 506 |
| DN 25 | EPDM | 10-001 12 510 |

- **hand nozzle PP** (polypropylene) **AdBlue®** version* with swivel inlet, outlet Ø 19 mm

| nominal Ø | seal | part no. |
|---|---|---|
| DN 19 | FKM | 10-001 12 518 |

- **hand nozzle PVDF** (polyvinylidene fluoride) **with swivel inlet**, outlet Ø 25 mm

| nominal Ø | seal | part no. |
|---|---|---|
| DN 13 | FKM | 10-001 12 515 |
| DN 19 | FKM | 10-001 12 501 |
| DN 25 | FKM | 10-001 12 505 |
| DN 19 | EPDM | 10-001 12 507 |
| DN 25 | EPDM | 10-001 12 511 |
| DN 19 | FFKM | 10-001 12 512 |
| DN 25 | FFKM | 10-001 12 514 |

- **hand nozzle AL** (aluminium) **with swivel inlet**, outlet Ø 25 mm

| nominal Ø | seal | part no. |
|---|---|---|
| DN 19 | NBR | 10-001 12 397 |
| DN 25 | NBR | 10-001 12 172 |

### Hand nozzles without hose connection for use with hoses with inliner (see page 32)

swaged hose fittings see page 29

- **hand nozzle PP** (polypropylene) **with swivel inlet**, outlet Ø 25 mm

| nominal Ø | seal | part no. |
|---|---|---|
| 28 mm | FKM | 10-001 12 556 |
| 28 mm | EPDM | 10-001 12 557 |

- **hand nozzle PVDF** (polyvinylidene fluoride) **with swivel inlet**, outlet Ø 25 mm

| nominal Ø | seal | part no. |
|---|---|---|
| 28 mm | FKM | 10-001 12 558 |
| 28 mm | FFKM | 10-001 12 560 |

- **hand nozzle AL** (aluminium) with swivel inlet, outlet Ø 25 mm

| nominal Ø | seal | part no. |
|---|---|---|
| G 1" female | NBR | 10-001 12 171 |

* AdBlue® is a registered trademark of: Verband der Automobilindustrie e. V. (VDA)

# Accessories

for drum and container pumps, series 400

F 400

## Explosion-proof hand nozzles

for applications in Zone 1

### Hand nozzles with hose connection for use with hoses without inliner (see page 31)

- **hand nozzle S** (stainless steel), outlet Ø 28 mm

| nominal Ø | seal | part no. |
|---|---|---|
| DN 19 | PTFE/FEP | 10-001 12 541 |
| DN 25 | PTFE/FEP | 10-001 12 542 |
| G ¾" female | PTFE/FEP | 10-001 12 555 |

- **hand nozzle S** (stainless steel) fluorine-free version, outlet Ø 28 mm

| nominal Ø | seal | part no. |
|---|---|---|
| G 1" male | EPDM | 10-001 12 545 |

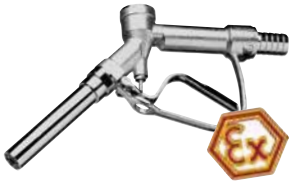

- **hand nozzle MS** (brass nickel-plated), outlet Ø 25 mm

| nominal Ø | seal | part no. |
|---|---|---|
| DN 19 | PTFE | 10-001 12 396 |
| DN 25 | PTFE | 10-001 12 337 |
| DN 32 | PTFE | 10-001 12 338 |

### Hand nozzles without hose connection for use with hoses with inliner (see page 32)

for direct mounting onto FLUX hose kits page 30
or swaged hose fittings page 28-29

- **hand nozzle S** (stainless steel), outlet Ø 28 mm

| nominal Ø | seal | part no. |
|---|---|---|
| Ø 28 | PTFE/FEP | 10-001 12 549 |
| G 1" male | PTFE/FEP | 10-001 12 543 |
| G 1 ¼" male | PTFE/FEP | 10-001 12 544 |

- **hand nozzle MS** (brass nickel-plated), outlet Ø 25 mm

| nominal Ø | seal | part no. |
|---|---|---|
| Ø 32 | PTFE | 10-001 12 340 |
| G 1" male | PTFE | 10-001 12 389 |
| G 1" female | PTFE | 10-001 12 339 |

### Hand nozzles with auto-stop function

- **hand nozzle AL 20** (aluminium), outlet Ø 24 mm

| nominal Ø | version | seal | part no. |
|---|---|---|---|
| G 1" male | with rigid inlet | PTFE | 10-001 12 109 |
| G 1" male | with swivel inlet | NBR | 10-001 12 347 |

- **hand nozzle AL 20 R** (aluminium unleaded), outlet Ø 21 mm

| nominal Ø | version | seal | part no. |
|---|---|---|---|
| G 1" male | with swivel inlet | NBR | 10-001 12 097 |

- **hand nozzle AL** (aluminium) for „AdBlue®"*, outlet Ø 19 mm

| nominal Ø | version | seal | part no. |
|---|---|---|---|
| G 1" male | AdBlue® * | NBR | 10-001 12 417 |

- **suitable for hand nozzle AL** for „AdBlue® *

| | part no. |
|---|---|
| magnetic adapter | 10-001 12 453 |

* AdBlue® is a registered trademark of: Verband der Automobilindustrie e. V. (VDA)

## Accessories for hand nozzles

**longer outlet tube** for mounting on hand nozzle

| material | part no. |
|---|---|
| polypropylene, 220 mm long, Ø 20 mm | 10-001 12 228 |
| stainless steel, 220 mm long, Ø 20 mm | 10-001 12 285 |

**stop valve in polypropylene** for hand nozzles (is inserted in outlet) or for outlet tube PP Ø 20

| | seal | spring | part no. |
|---|---|---|---|
| for outlet tube PP Ø 20 | FKM | S | 10-959 14 019 |
| | FFKM | HC | 10-959 14 026 |
| for hand nozzle S with outlet Ø 28 (not permitted for use in hazardous areas) | FKM | S | 10-959 14 064 |
| | FFKM | HC | 10-959 14 066 |

## FLUX discharge units with spring valve (FAEplus) for media up to 300 cP without solids content

### wired version with start/stop button, with drip valve, without control cable (page 75), without mounting the control cable

- FLUX discharge units with spring valve **with hose connection,** outlet Ø 32 mm

| | material | seal | part no. |
|---|---|---|---|
| FAEplus PP | PP | FKM | 10-001 12 571 |
| FAEplus PP | PP | EPDM | 10-001 12 572 |
| FAEplus PVDF | PVDF | FKM | 10-001 12 573 |
| FAEplus PVDF | PVDF | FFKM | 10-001 12 574 |
| FAEplus PVDF | PVDF | EPDM | 10-001 12 575 |
| FAEplus S | S | FKM | 10-001 12 576 |
| FAEplus S | S | FFKM | 10-001 12 577 |
| FAEplus S | S | EPDM | 10-001 12 578 |

- **accessory for discharge unit**
  spiral tape for fixation of the cable on the hose

| | part no. |
|---|---|
| Ø 20 - 100 mm | 10-001 10 072 |

5-core control cable for the connection of the discharge unit with the switching amplifier

| | part no. |
|---|---|
| 5 m long | 10-934 08 038 |
| 10 m long | 10-934 08 040 |
| 15 m long | 10-934 08 041 |

drip valve IG M 29x1,5, seal EPDM

| material | part no. |
|---|---|
| PP | 10-959 14 077 |
| PVDF | 10-959 14 078 |
| S | 10-959 14 079 |

**FLUX flow meters see from page 59**
**Hose fittings and hoses see page 29 and 30**

# Accessories

for drum and container pumps, series 400



## FES fume glands and accessories control emission of dangerous vapours from drums and IBC

### Consisting of valve part and threaded ring

(please order both parts for a complete unit)

- **valve part PP** (polypropylene), with FKM O-ring, with G ¼ " female connection for hose nozzle

| pump Ø | part no. |
|---|---|
| 25 mm | 10-001 14 309 |
| 32 mm | 10-001 14 313 |
| 40 mm | 10-001 14 181 |
| 41 mm | 10-001 14 182 |
| 50 mm | 10-001 14 243 |

valve part with ball valve

- **threaded ring PP** (polypropylene) with FKM flat seal

| pump Ø | thread connection | part no. |
|---|---|---|
| 25/32/40/41 mm | G 2" B male | 10-001 14 218 |
| 25/32/40/41 mm | CCS 57 x 4 male thread | 10-001 14 224 |
| 25/32/40/41 mm | CCS 60 x 6 female thread | 10-001 14 228 |
| 25/32/40/41 mm | CCS 70 x 6 female thread | 10-001 14 226 |
| 25/32/40/41 mm | CCS 70 x 6 male thread | 10-001 14 232 |
| 25/32/40/41 mm | BCS 70 x 6 (with O-ring) male thread | 10-001 14 236 |
| 50 mm | G 2" B male | 10-001 14 238 |
| 50 mm | CCS 70 x 6 male thread | 10-001 14 267 |
| 40/41 mm | CCS 64 x 5 male thread | 10-001 14 230 |

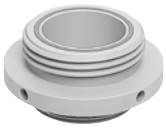

- **valve part S** (stainless steel), with FEP O-ring with G 3/8" female connection - for use in ATEX areas

| pump Ø | part no. |
|---|---|
| 28 mm (FKM O-ring) | 10-001 14 319 |
| 41 mm | 10-001 14 192 |
| 41 mm with gas compensation connector DN 10 | 10-001 14 194 |
| 50 mm | 10-001 14 253 |
| 50 mm with gas compensation connector DN 10 | 10-001 14 245 |

valve part with ⅜" BSPPF gas compensation connector

- **threaded ring S** (stainless steel), with PE flat seal - for use in ATEX areas

| pump Ø | nominal Ø | part no. |
|---|---|---|
| 28/41 mm | G 2" male | 10-001 14 325 |
| 28/41 mm | S 57 x 4 male thread | 10-001 14 329 |
| 50 mm | G 2" male | 10-001 14 331 |

- **threaded ring MS** (brass), with PE flat seal - for use in ATEX areas

| pump Ø | nominal Ø | part no. |
|---|---|---|
| 41 mm | G 2" male | 10-001 14 327 |

### Accessories for additional use of a gas compensation connector

- **hose nozzle** (PP) for valve part PP, DN 10 - G ¼" male

| | part no. |
|---|---|
| | 10-959 13 128 |

- **PE corrugated hose** for gas compensation

| | part no. |
|---|---|
| DN 10, outer Ø 13 mm | 10-001 10 061 |

- **EPDM compressed air hose** for gas compensation

| | part no. |
|---|---|
| DN 10 electrically conductive, outer Ø 17.5 mm | 10-001 10 913 |

- **fume cone** (polypropylene, electrically conductive) for hand nozzle with outlet DN 10

| | part no. |
|---|---|
| for longer outlet tube Ø 20 mm | 10-001 14 285 |
| for outlet Ø 24 mm | 10-001 14 296 |

## Compression gland – secure pump into drum or IBC

| material | pump Ø | connection | part no. |
|---|---|---|---|
| polyethylene | 41 mm | 57 x 4 male thread | 10-001 14 067 |
| polyethylene | 41 mm | 70 x 6 male thread | 10-001 14 065 |
| polyethylene | 50 mm | 70 x 6 male thread | 10-001 14 066 |
| polypropylene | 40/41 mm | R 2 male, electrically conductive | 10-001 14 054 |
| polypropylene | 50 mm | R 2 male, electrically conductive | 10-001 14 062 |
| steel/zinc-plated | 40 mm | M 64 x 4 / G 2" male thread | 10-001 14 061 |
| steel/zinc-plated | 41 mm | M 64 x 4 / G 2" male thread | 10-001 14 000 |
| steel/zinc-plated | 50 mm | G 2" male thread | 10-001 14 003 |
| steel/zinc-plated | 50 mm | M 64 x 4 male thread | 10-001 14 002 |

## Screw top for IBC – use with G2" male compression gland

| connection | part no. |
|---|---|
| DN 150 | 10-001 14 063 |
| DN 225 | 10-001 14 064 |

## Pump inlet suction strainers – for liquids containing solid particles

| material | pump Ø | outer Ø | part no. |
|---|---|---|---|
| polypropylene | 40/41 mm | 53 mm | 10-001 10 200 |
| polypropylene | 50 mm | 60 mm | 10-001 10 205 |
| polyvinylidene fluoride | 40/41 mm | 53 mm | 10-001 10 245 |
| polyvinylidene fluoride | 50 mm | 60 mm | 10-001 10 267 |
| stainless steel | 41 mm | 53 mm | 10-001 10 209 |
| stainless steel | 43 mm (for FP 424 S-43/38 and -43/37Z) | 53 mm | 10-001 10 294 |
| stainless steel | 50 mm | 59 mm | 10-001 10 212 |

## Discharge spout

with union nut G 1¼" female – to suit drum pump outlet

| material | nominal Ø | part no. |
|---|---|---|
| stainless steel (S) | DN 25 | 10-959 07 007 |
| polypropylene (PP) | DN 19 | 10-959 07 009 |

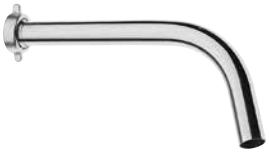

## Quick action coupling SSK 400

use where quick or frequent disassembly of pump and motor is required

| | part no. |
|---|---|
| complete | 10-001 10 802 |
| threaded ring (motor) | 10-001 10 800 |
| clamping element (pump) | 10-001 10 804 |

# Accessories

for drum and container pumps, series 400

## Attachment clamps

- **wall brackets** in stainless steel 1.4301, with screws for fixing

| | part no. |
|---|---|
| for drum and container pumps | 10-001 10 426 |

- **attachment clamp**, material: steel zinc-plated, polypropylene

| for pump Ø | part no. |
|---|---|
| 40/41 mm | 10-001 10 601 |
| 50 mm | 10-001 10 603 |

- **container clip**, stainless steel 1.4301, rilsan-coated

| for pump Ø | part no. |
|---|---|
| 40/41 mm | 10-001 15 005 |
| 50 mm | 10-001 15 006 |

## Tools

| | part no. |
|---|---|
| jointed hood-wrench for **fume glands**, 60-90 mm, for capstan nuts DIN 1816, stud Ø 5mm | 10-961 42 500 |
| key for coupling star | 10-961 40 889 |

## Mixing tubes

for drum pumps instead of the outer tube for dedicated mixing applications in drums or IBCs

- for F 430 AL-41/38

| immersion length | part no. |
|---|---|
| 700 mm | 10-430 11 192 |
| 1.000 mm | 10-430 11 193 |
| 1.200 mm | 10-430 11 194 |

- for F 430 S-41/38 (not allowed in hazardous areas)

| immersion length | part no. |
|---|---|
| 700 mm | 10-430 21 192 |
| 1.000 mm | 10-430 21 193 |
| 1.200 mm | 10-430 21 194 |

- for F 430 PP-40/33

| immersion length | part no. |
|---|---|
| 700 mm | 10-430 41 192 |
| 1.000 mm | 10-430 41 193 |
| 1.200 mm | 10-430 41 194 |

## Non-return valves

- stainless steel, seal FKM for mounting onto pump discharge

| for pumps | part no. |
|---|---|
| FP 424 - F 430 G 1 ¼ - G 1 ¼ A | 10-959 14 024 |
| ¾" on both sides | 10-959 14 022 |

- stainless steel, seal PTFE

| connection | part no. |
|---|---|
| G 1¼ – G 1¼ A | 10-959 14 048 |
| G ' on both sides | 10-959 14 047 |

- polypropylene, FKM seal, for mounting onto pump foot

| for pumps | part no. |
|---|---|
| F 430 PP-40/33 | 10-959 14 029 |
| F 430 PP-40/33Z | 10-959 14 030 |

- polyvinylidene fluoride, FKM seal, for mounting onto pump foot

| for pumps | part no. |
|---|---|
| F 430 PVDF-40/33 | 10-959 14 038 |
| F 430 PVDF-40/33Z | 10-959 14 039 |

# Accessories

for drum and container pumps (series 400) in FOOD version



## Accessories for drum and container pumps in FOOD version

suitable for food contact according to Regulation (EC) 1935/2004 and FDA CFR 21

- **hose connections**
  material: stainless steel 316 Ti, pump connection clamp 1½“

| nominal Ø | seal | part no. |
|---|---|---|
| DN 19 | FKM | 10-959 04 171 |
| DN 19 | NBR | 10-959 04 172 |
| DN 25 | FKM | 10-959 04 169 |
| DN 25 | NBR | 10-959 04 170 |

- **swaged hose fittings for the connection of pump and hose**
  for use with hose or special hose for food and chemistry, screwed version, stainless steel 316 Ti, connection pump clamp 1½“, DN 40

| nominal Ø | seal | part no. |
|---|---|---|
| DN 19 | FKM | 10-959 13 354 |
| DN 19 | NBR | 10-959 13 355 |
| DN 25 | FKM | 10-959 13 356 |
| DN 25 | NBR | 10-959 13 357 |

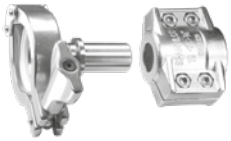

- **discharge spout**
  material: stainless steel

| nominal Ø | seal | part no. |
|---|---|---|
| 1 ½“ clamp (Ø 28) | FKM | 10-959 07 030 |
| 1 ½“ clamp (Ø 28) | NBR | 10-959 07 033 |

- **outlet tube for hand nozzle S**
  stainless steel 316 Ti, G ¾ male connection, 100 mm long, Ø 10 mm

| seal | part no. |
|---|---|
| PTFE, FDA | 10-001 12 658 |

- **flap valve**
  material: stainless steel, connection pump clamp 1½“, DN 40

| seal | part no. |
|---|---|
| FKM | 10-959 19 010 |
| NBR | 10-959 19 012 |

- **joint clamp for flap valve DN 40**

| material | connection | part no. |
|---|---|---|
| stainless steel | clamp 1 ½“ | 10-430 21 019 |

- **seals for flap valve DN 40**

| material | part no. |
|---|---|
| EPDM, FDA/FOOD | 10-925 69 017 |
| NBR, FDA/FOOD | 10-925 69 015 |
| FKM, FDA/FOOD | 10-925 69 014 |
| PTFE, FDA/FOOD | 10-925 69 016 |

- **hand nozzle**
  for use with FLUX drum pump FP 430 S FOOD (for alcohols) outlet Ø 28 mm

| material | nominal Ø | seal | part no. |
|---|---|---|---|
| stainless steel | clamp 1½“ | PTFE/FKM | 10-001 12 568 |

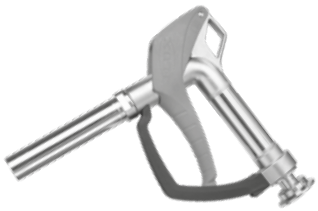

Hoses see page 31

# Progressive cavity pumps

VISCOPOWER F 570 and F 580

## VISCOPOWER Pumps F 570 - with double stage gearbox i=16

**open mechanical seal,** FKM seal, stator material PTFE, torsion shaft

| immersion depth [mm] | rotor geometry | part no. |
|---|---|---|
| 700 mm | R33 | 12-570 00 001 |
| 700 mm | R52 | 12-570 00 004 |
| 1.000 mm | R17 | 12-570 00 007 |
| 1.000 mm | R33 | 12-570 00 002 |
| 1.000 mm | R52 | 12-570 00 005 |
| 1.200 mm | R17 | 12-570 00 008 |
| 1.200 mm | R33 | 12-570 00 003 |
| 1.200 mm | R52 | 12-570 00 006 |

**open mechanical seal,** NBR seal, stator material NBR white, torsion shaft

| immersion depth [mm] | rotor geometry | part no. |
|---|---|---|
| 1.000 mm | R33 | 12-570 00 011 |
| 1.000 mm | R52 | 12-570 00 013 |
| 1.200 mm | R33 | 12-570 00 012 |
| 1.200 mm | R52 | 12-570 00 014 |



**open mechanical seal,** FKM seal, stator material PTFE ATEX, torsion shaft, with Ex approval, ex-marking II 1/2 G Ex h IIB T4...T3 Ga/Gb

| immersion depth [mm] | rotor geometry | part no. |
|---|---|---|
| 1.000 mm | R33 | 12-570 00 021 |
| 1.200 mm | R33 | 12-570 00 022 |

**closed mechanical seal,** FKM seal, stator material PTFE, torsion shaft, for food contact according to regulation (EC) 1935/2004 and FDA CFR 21

| immersion depth [mm] | rotor geometry | part no. |
|---|---|---|
| 1.000 mm | R33 | 12-570 00 015 |
| 1.000 mm | R52 | 12-570 00 017 |
| 1.200 mm | R33 | 12-570 00 016 |
| 1.200 mm | R52 | 12-570 00 018 |

**closed mechanical seal,** FKM seal, stator material PTFE, torsion shaft, with 3-A approval, for food contact according to regulation (EC) 1935/2004 and FDA CFR 21

| immersion depth [mm] | rotor geometry | part no. |
|---|---|---|
| 1.000 mm | R33 | 12-570 00 019 |
| 1.000 mm | R52 | 12-570 00 020 |


**outlet adapter see page 47**
**hose connections see page 47**
**drive motors for gear version see page 16-18**

## Accessories for motors F 457, F 458, F 460 Ex and FBM 4000 Ex

image similar

- **CEE plug**, for applications in Zone 1, 3-poles, 200-250 V

| System | part no. |
|---|---|
| CEAG, Ex-marking: II 2 G Ex db eb IIC/IIB+H2 T6 | 10-937 01 030 |
| Stahl, Ex-marking II 2 G Ex db eb IIC T6 Gb | 10-937 01 018 |

image similar

- **CEE socket**, for applications in Zone 1, 3-poles, 200-250 V

| System | part no. |
|---|---|
| CEAG, Ex-marking: II 2 G Ex eb IIC T6 | 10-937 50 041 |
| Stahl, Ex-marking II 2 G Ex db eb IIC T6 Gb | 10-937 50 022 |

- **earth wire** with crocodile clip

| | cable cross-section | depth | clamp | part no. |
|---|---|---|---|---|
| spiral cable (yellow) | 3 mm² | 4 m | stainless steel | 10-931 90 023 |
| cable (green/yellow) | 4 mm² | 2 m | steel | 10-931 90 015 |

- **carrying handle**, Rilsan-coated

| | part no. |
|---|---|
| F 457 | 10-001 10 533 |
| F 458, F 458-1 | 10-001 10 500 |

- **carrying handle**, cpl. with earth wire

| | part no. |
|---|---|
| F 460 Ex, FBM 4000 Ex | 10-001 10 596 |

- **inertia hoist**, rope depth 2 m

| | part no. |
|---|---|
| carrying force 9 – 14 kg | 10-001 21 000 |
| carrying force 16 – 21 kg | 10-001 21 002 |

# Drive motors and accessories

## Compressed-air motors F 416 Ex for drum and container pumps

470 watt at 6 bar, 14 liter/sec. air consumption, for applications in Zone 1, Ex-marking II 2G Ex h IIC T6 Gb. Require dry, clean, lubricated air.

- **F 416 Ex**

| | part no. |
|---|---|
| with operating valve (adjustable and lockable) | 10-416 00 131 |

- **F 416-1 Ex**

| | part no. |
|---|---|
| no valve, for automatic control | 10-416 00 132 |

- **F 416-2 Ex**

| | part no. |
|---|---|
| with ball valve, to regulate speed | 10-416 00 133 |

## Accessories for compressed-air motors F 416 Ex

- **filter-regulator-lubricator unit** G ¼" female connection

| | part no. |
|---|---|
| for non hazardous areas | 10-001 10 100 |
| explosion-proof | 10-001 10 113 |

- **compressed-air hose**

| | part no. |
|---|---|
| DN 10, electrically conductive, EPDM, blue, outer Ø 17 mm | 10-001 10 098 |

- **hose coupling with hose connection in brass**

| | part no. |
|---|---|
| DN 10 | 10-959 13 066 |

- **coupling in brass**

| | part no. |
|---|---|
| DN 7,2 - G ¼" male | 10-959 13 210 |

- **threaded nipple in brass for hose coupling**

| | part no. |
|---|---|
| DN 10, G ¼" male | 10-959 13 065 |

- **hose nozzle (brass)**

| | part no. |
|---|---|
| DN 10, G ¼" male | 10-959 05 022 |

- **plug-in sleeve in brass**

| | part no. |
|---|---|
| DN 10 | 10-959 13 209 |

- **1-ear hose clip**

| | part no. |
|---|---|
| ø 14,8; clamping range 8-18 mm | 10-959 13 237 |

- **earth wire** with crocodile clip

| | cable cross-section | depth | clamp | part no. |
|---|---|---|---|---|
| spiral cable (yellow) | 3 mm² | 4 m | stainless steel | 10-931 90 023 |
| cable (green/yellow) | 4 mm² | 2 m | steel | 10-931 90 015 |

- **fine filter sound absorber** with oil separator

| | part no. |
|---|---|
| complete with mounting bracket | 10-947 15 005 |

- **exhaust air hose kit** for compressed-air motors F 416 PVC hose DN13, 5 m long

| | part no. |
|---|---|
| connections G ½ - G ½ A (both male threads) for compressed-air motors F 416 **with** additional fine filter silencer with oil separator | 10-001 10 886 |

further accessories for drive motors can be found in our detailed FLUX Accessories brochure.

## VISCOPOWER pumps F 570 with single-stage gear i=7

- **open mechanical seal,** FKM seal, torsion shaft

| immersion depth [mm] | rotor geometry | stator material | part no. |
|---|---|---|---|
| 1.000 mm | R33 | PTFE | 12-570 00 024 |
| 1.000 mm | R52 | PTFE | 12-570 00 023 |

## Appropriate motors F 403

- **single phase AC motor,** 230 V, 50 Hz, IP 55,
  with motor protection switch, 5 m cable and plug

| | part no. |
|---|---|
| **F 403/2**, 0,50 kW, 3.000 rpm | 10-403 01 023 |
| **F 403/4**, 0,55 kW, 1.500 rpm | 10-403 01 024 |

- **three-phase motor,** 230/400 V, 50 Hz, IP 55,
  with motor protection switch, without cable

| | part no. |
|---|---|
| **F 403/4**, 0,55 kW, 1.500 rpm | 10-403 01 025 |
| **F 403/2**, 0,75 kW, 3.000 rpm | 10-403 01 026 |
| **F 403/4 Ex**, 0,55 kW, 1.500 rpm | 10-403 01 030[1] |

[1] Ex II 2G Ex eb IIC T3 Gb

image similar



**outlet adapter see page 47**
**hose connections see page 47**

## VISCOPOWER pumps F 580 with motor flange

- **open mechanical seal,** FKM seal, stator material PTFE

| immersion depth [mm] | rotor geometry | shaft | part no. |
|---|---|---|---|
| 700 mm | R33 | cardan | 12-580 00 001 |
| 700 mm | R52 | cardan | 12-580 00 004 |
| 1.000 mm | R33 | torsion | 12-580 00 002 |
| 1.000 mm | R52 | torsion | 12-580 00 005 |
| 1.200 mm | R33 | torsion | 12-580 00 003 |
| 1.200 mm | R52 | torsion | 12-580 00 006 |

- **open mechanical seal,** NBR seal, stator material NBR white, torsion shaft

| immersion depth [mm] | rotor geometry | part no. |
|---|---|---|
| 1.000 mm | R17 | 12-580 00 009 |
| 1.000 mm | R33 | 12-580 00 011 |
| 1.200 mm | R17 | 12-580 00 010 |
| 1.200 mm | R33 | 12-580 00 012 |

- **open mechanical seal,** FKM seal, stator material PTFE ATEX, torsion shaft, ex-protected, ex-marking II 1/2 G Ex h IIB T4...T3 Ga/Gb

| immersion depth [mm] | rotor geometry | part no. |
|---|---|---|
| 1.000 mm | R33 | 12-580 00 017 |
| 1.200 mm | R33 | 12-580 00 018 |

- **closed mechanical seal,** FKM seal, stator material PTFE, torsion shaft, for food contact according to regulation (EC) 1935/2004 and FDA CFR 21

| immersion depth [mm] | rotor geometry | part no. |
|---|---|---|
| 1.000 mm | R52 | 12-580 00 013 |
| 1.200 mm | R52 | 12-580 00 014 |

- **closed mechanical seal,** FKM seal, stator material PTFE, torsion shaft, with 3-A approval, for food contact according to regulation (EC) 1935/2004 and FDA CFR 21

| immersion depth [mm] | rotor geometry | part no. |
|---|---|---|
| 1.000 mm | R33 | 12-580 00 015 |
| 1.000 mm | R52 | 12-580 00 016 |

- **adapter flange kit for VISCOPOWER pumps F 580**
  anodized aluminum, with coupling half size 24 and 4 screws

| suitable for | part no. |
|---|---|
| IEC standard motors size 90 design B14 | 10-001 10 915 |
| IEC standard motors size 100/112 design B14 | 10-001 10 920 |

- **sensor cable for VISCOPOWER with pulser**

| | part no. |
|---|---|
| 5 m long, for connection of sensor and evaluation unit FLUXTRONIC® | 11-000 00 192 |

**outlet adapter see page 47**
**hose connections see page 47**
**drive motors for motor flange version see page 50**

# Accessories for progressive cavity pump

F 580

- **stators**

| rotor geometry | material | regulation | part no. |
|---|---|---|---|
| R17 | NBR white | FDA conform, (EC) No. 1935/2004 | 11-000 00 031 |
| | FKM | | 11-000 00 032 |
| | PTFE | FDA conform, (EC) No. 1935/2004 | 11-000 00 033 |
| | PTFE ATEX | FDA conform, (EC) No. 1935/2004 | 11-000 00 034 |
| R33 | NBR white | FDA conform, (EC) No. 1935/2004 | 11-000 00 035 |
| | FKM | | 11-000 00 036 |
| | PTFE | FDA conform, (EC) No. 1935/2004 | 11-000 00 037 |
| | PTFE ATEX | FDA conform, (EC) No. 1935/2004 | 11-000 00 038 |
| R52 | NBR white | FDA conform, (EC) No. 1935/2004 | 11-000 00 039 |
| | FKM | | 11-000 00 040 |
| | PTFE | FDA conform, (EC) No. 1935/2004 | 11-000 00 041 |
| | PTFE ATEX | FDA conform, (EC) No. 1935/2004 | 11-000 00 042 |
| | EDPM white | FDA conform, (EC) No. 1935/2004 | 11-000 00 386 |
| R83 | NBR white | FDA conform, (EC) No. 1935/2004 | 11-000 00 043 |
| | FKM | | 11-000 00 044 |

- **stator housing**

| | part no. |
|---|---|
| with suction protection | 11-000 00 145 |
| with clamping socket 2“ | 11-000 00 152 |
| with inliner suction protection | 11-000 00 147 |

| | |
|---|---|
| with suction protection 3-A | 11-000 00 146 |
| with inliner suction protection 3-A | 11-000 00 148 |

- **outlet adapter in stainless steel,** FKM seal and hinged clamp

| | part no. |
|---|---|
| Clamp 2“ on G ½“ AG | 11-000 00 159 |
| Clamp 2“ on G 1“ AG | 11-000 00 160 |
| Clamp 2“ on G1 ½“ AG | 11-000 00 161 |
| Clamp 2“ on RD 58x1/6“ AG | 11-000 00 162 |
| Clamp 2“ on RD 65x1/6“ AG | 11-000 00 163 |
| Clamp 2“ on G 2“ AG | 11-000 00 231 |

- **tools**

| | part no. |
|---|---|
| yesws | 10-961 42 504 |
| staking tool | 11-000 00 194 |

- **hose connections in stainless steel**

| connection | seal | part no. |
|---|---|---|
| DN 25, G 1½, with union nut | PE | 10-959 04 002 |
| DN 32, G 1½, with union nut | PE | 10-959 04 003 |
| DN 38, G 1½, with union nut | PE | 10-959 04 004 |
| DN 25, Rd 58 x 1/6, with union nut | - | 10-959 04 115 |
| DN 32, Rd 58 x 1/6, with union nut | - | 10-959 04 134 |
| DN 38, Rd 58 x 1/6, with union nut | - | 10-959 04 130 |
| DN 32, Clamp 2“, with hinged clamp | FKM | 10-959 04 173 |
| DN 38, Clamp 2“, with hinged clamp | FKM | 10-959 04 175 |

# Accessories for progressive cavity pumps

F 570 and F 580



- **by-pass valve**, connection G 1½ – G 1½ A

| | part no. |
|---|---|
| brass, PTFE seal, with flow-back tube 300 mm long | 10-001 18 026 |
| brass, PTFE seal, with hose connection DN 19 | 10-001 18 028 |
| stainless steel, FKM seal, with hose connection DN 19 | 10-001 18 029 |
| stainless steel, PTFE seal, with hose connection DN 19 | 10-001 18 046 |
| brass, PTFE seal, with hose connection DN 25 | 10-001 18 056 |
| stainless steel, FKM seal, with hose connection DN 25 | 10-001 18 057 |
| stainless steel, PTFE seal with hose connection DN 25 | 10-001 18 058 |

- **attachment clamp**, material: steel zinc-plated, PP

| for pump Ø | part no. |
|---|---|
| 53 mm | 11-000 00 209 |

- **container clip**, stainless steel 1.4301

| for pump Ø | part no. |
|---|---|
| 53 mm | 10-001 15 006 |

- **compression gland** (for pump Ø 53 mm)

| | part no. |
|---|---|
| G 2“ male | 10-001 14 084 |
| M 64 x 4 | 10-001 14 088 |
| external thread R 2, electrically conductive, PP | 10-001 14 091 |

- **suction strainer S** (stainless steel)

| | part no. |
|---|---|
| for pump Ø 53 mm | 11-000 00 186 |

- **discharge spout,** material stainless steel 316 Ti

| connection | part no. |
|---|---|
| G 1 ½“ male | 10-959 07 043 |

## FES fume glands for VISCOPOWER

consisting of valve part and threaded ring (please order both parts for a complete unit)

- **valve part S** (stainless steel) for pump Ø 53 mm, with FEP O-ring with G ⅜" female connection

| | part no. |
|---|---|
| with ball valve made of ETFE | 10-001 14 340 |
| with gas compensation connector DN 10 | 10-001 14 341 |

valve part with ⅜" BSPPF
gas compensation connector

- **threaded ring S** (stainless steel), with PE flat seal

| pump Ø | nominal Ø | part no. |
|---|---|---|
| 53 mm | G 2" male | 10-001 14 346 |

## Accessories for progressive cavity pumps in FOOD version

suitable for food contact according to Regulation (EC) 1935/2004 and FDA CFR 21

- **hose connections** in stainless steel 316 Ti, 2“ clamp connection

| nominal Ø | seal | part no. |
|---|---|---|
| DN 32 | FKM | 10-959 04 173 |
| DN 32 | NBR | 10-959 04 174 |
| DN 38 | FKM | 10-959 04 175 |
| DN 38 | NBR | 10-959 04 176 |

- **swaged hose fittings** for use with hose or special hose for food and chemistry, screwed version, stainless steel 316 Ti, connection pump clamp 2”

| nominal Ø | seal | part no. |
|---|---|---|
| DN 25 | FKM | 10-959 13 358 |
| DN 25 | NBR | 10-959 13 359 |
| DN 32 | FKM | 10-959 13 360 |
| DN 32 | NBR | 10-959 13 361 |
| DN 38 | FKM | 10-959 13 362 |
| DN 38 | NBR | 10-959 13 363 |
| DN 25 | PTFE | 10-959 13 388 |
| DN 32 | PTFE | 10-959 13 389 |
| DN 38 | PTFE | 10-959 13 390 |

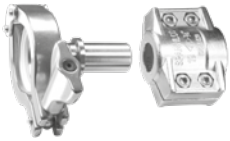

- **discharge spout** in stainless steel 316 Ti

| nominal Ø | part no. |
|---|---|
| Clamp 2“ (Ø 42) | 10-959 07 036 |

- **accessories for discharge spout** in stainless steel 316 Ti

| | part no. |
|---|---|
| holder for spout | 10-001 22 440 |
| cardan clip for clamp 2“ | 10-550 24 376 |
| seal for 2“ clamp, EPDM (with FDA/FOOD approval) | 10-925 89 059 |
| seal for 2“ clamp, FKM (with FDA/FOOD approval) | 10-925 89 023 |
| sealing ring Clamp 2", PTFE | 10-925 89 008 |
| sealing ring Clamp 2", NBR white | 10-925 80 010 |

- **flap vale** in stainless steel 1.4404, 2“ clamp connection 2“, DN 50

| seal | part no. |
|---|---|
| FKM | 10-959 19 011 |
| NBR | 10-959 19 013 |

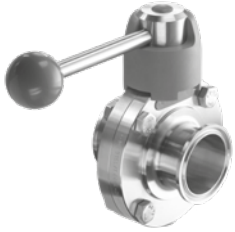

- **hinged clamp** for discharge spout with and without flap valve with 2“ clamp

| material | connection | part no. |
|---|---|---|
| stainless steel | for clamp 2“ | 10-550 24 376 |
| seal for 2“ clamp, FKM (with FDA/FOOD approval) | | 10-925 89 023 |
| seal for 2“ clamp, NBR (with FDA/FOOD approval) | | 10-925 89 025 |

# Drive motors for progressive cavity pumps

F 580 - motor flange version



## Drive motors for progressive cavity pump F 580 in motor flange version

- **three-phase motor** 230/400 V, 50 Hz, IP 55, IE3, **with motor protection switch**

| | part no. |
|---|---|
| 0,75 kW, 1.000 rpm | 10-001 03 443 |
| 1,1 kW, 1.000 rpm | 10-001 03 445 |
| 0,75 kW, 750 rpm | 10-001 01 590 |
| 1,1 kW, 750 rpm | 10-001 01 591 |

- **three-phase motor** 230/400 V, 50 Hz, IP 55, IE3, **with cable terminal box**

| | part no. |
|---|---|
| 0,75 kW, 1.000 rpm | 10-001 03 442 |
| 1,1 kW, 1.000 rpm | 10-001 03 444 |
| 1,5 kW, 1.000 rpm | 10-001 03 446 |
| 0,75 kW, 750 rpm | 10-001 01 588 |
| 1,1 kW, 750 rpm | 10-001 01 589 |

image similar

- **three-phase motor** 230/400 V, 50 Hz, **with cable terminal box**
  Ex marking Ex II 2G Ex eb IIC T3 Gb

| | part no. |
|---|---|
| 0,75 kW, 1.000 rpm | 10-001 01 122 |
| 1,0 kW, 1.000 rpm | 10-001 01 123 |
| 0,95 kW, 750 rpm | 10-001 01 592 |

- **spur wheel back-geared motor** with frequency regulation
  voltage 380 - 500 V, 50/60 Hz, IP 54, IE3, without foot flange

| | A | part no. |
|---|---|---|
| 0,55 kW, 47 - 472 rpm | 1,6 | 10-001 02 178 |

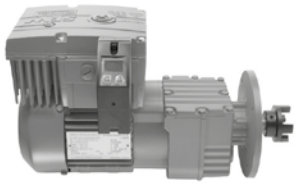

image similar

- **start / stop switch for spur wheel back-geared motor**
  with frequency regulation and attached set point adjuster

| | part no. |
|---|---|
| switching voltage 24 V DC, IP 66, with 1 m spiral cable with Hirschmann plug | 10-936 00 040 |

- **compressed-air motor**, explosion-proof, with silencer

| | part no. |
|---|---|
| FPM 4 Ex, 0,6 kW at 1.000 rpm | 10-001 04 000 |
| FPM 6 Ex, 1,2 kW at 1.000 rpm | 10-001 04 014 |
| FPM 8 Ex, 2,0 kW at 1.000 rpm | 10-001 04 002 |

FPM 4 Ex

## Accessories for compressed-air motor FPM 4 Ex – FPM 8 Ex

- **carrying handle**, stainless steel

| | part no. |
|---|---|
| | 10-001 10 520 |

- **filter, regulator and lubricator unit** consisting of water separator, oil mist blower, manometer, G ½“ female connection

| | part no. |
|---|---|
| not explosion-proof | 10-001 10 103 |
| explosion- proof | 10-001 10 116 |

- **PVC compressed-air hose**

| | part no. |
|---|---|
| DN 13, outer Ø 20 mm | 10-001 10 008 |

- **hose coupling** in brass

| | part no. |
|---|---|
| DN 13 | 10-959 13 122 |

- **threaded nipple** in brass for hose coupling

| | part no. |
|---|---|
| DN 13 - G ½ A | 10-959 13 121 |

- **hose nozzle** in brass

| | part no. |
|---|---|
| DN 13 – G ½ A | 10-959 05 017 |

- **1-ear hose clip**

| material | clamping range | part no. |
|---|---|---|
| stainless steel | 18,8 – 22,0 mm | 10-959 13 239 |

- **fine filter sound absorber** with oil separator

| | part no. |
|---|---|
| complete with mounting bracket | 10-947 15 005 |

# Accessories for drive motors

for VISCOPOWER F 580

## Accessories for three-phase motors

- **carrying handle**, stainless steel (pump unit is screwed to the carrying handle) **for pump flange Ø 120**

| | part no. |
|---|---|
| for type F 403 | 10-001 10 584 |

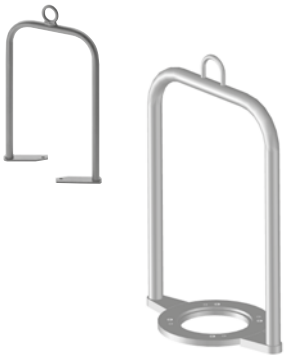

- **carrying handle for motor flange Ø 160**
  mounting with 2 lugs for 3-phase motors up to size 90 and max. 20 kg

| | part no. |
|---|---|
| standard version | 10-001 10 531 |
| with mounting for ex motor protection switch | 10-001 10 588 |

- **carrying handle for motor flange Ø 160**
  mounting with flange for 3-phase motors up to size 112M

| | part no. |
|---|---|
| separate mounting of pump and motor. Removal of the pump can be done without removal of the motor. | 10-001 10 598 |

- **power supply cable**

| | part no. |
|---|---|
| pre-assembled with sleeve and Cekon plug, 5 m long | 10-934 08 020 |
| pre-assembled with sleeve without plug, 5 m long | 10-934 08 025 |
| per meter | 10-934 08 901 |
| electrical mounting commutator motor | 10-Z05 00 MKS |
| electrical mounting three-phase motor | 10-Z05 00 DKS |

- **cekon plug**

| | part no. |
|---|---|
| 5-poles | 10-937 01 014 |
| 5-poles with commutator | 10-937 01 035 |

- **CEE round pin plug**, for applications in Zone 1, 5-poles, 380 - 415 V (CEAG), 240 - 415 V (Stahl)

| system | part no. |
|---|---|
| CEAG, Ex-marking: II 2 G Ex db eb IIC/IIB+H2 T6 | 10-937 01 029 |
| Stahl, Ex-marking: II 2 G Ex db eb IIC T6 Gb | 10-937 01 020 |

- **CEE socket,** for applications in Zone 1, 5-poles 380 - 415 V (CEAG), 240 - 415 V (Stahl)

| system | part no. |
|---|---|
| CEAG, Ex-marking: II 2 G Ex eb IIC T6 | 10-937 50 040 |
| Stahl, Ex-marking: II 2 G Ex db eb IIC T6 Gb | 10-937 50 024 |

- **motor protection switch**, for applications in Zone 1, Ex-marking II 2 G Ex d e IIC T5 Gb, with 2 cable inlet ports, for mounting on the carrying handle

| | part no. |
|---|---|
| 0,75 kW, 700 rpm, 1,6–2,5 A | 10-936 06 118 |
| 0,75 kW, 930 rpm, 1,6–2,5 A | 10-936 06 118 |
| 0,95 kW, 700 rpm, 2,5–4,0 A | 10-936 06 119 |
| 1,1 kW, 930 rpm, 2,5–4,0 A | 10-936 06 119 |

- **earth wire** with crocodile clip

| | cable cross-section | depth | forceps | part no. |
|---|---|---|---|---|
| spiral cable (yellow) | 3 mm² | 4 m | stainless steel | 10-931 90 023 |
| cable (green/yellow) | 4 mm² | 2 m | steel zinc-plated | 10-931 90 015 |

- **motor protection switch**, jet-proof acc. to IP 65 with 2 cable inlet ports

| | part no. |
|---|---|
| 1,30 – 2,00 A, size 71 | 10-936 06 210 |
| 1,30 – 2,00 A, size 80 + 90 | 10-936 06 211 |
| 1,80 – 3,00 A, size 80 + 90 | 10-936 06 212 |
| 1,80 – 3,00 A, size 100 + 112 | 10-936 06 213 |
| 2,80 – 4,60 A, size 100 + 112 | 10-936 06 214 |
| 4,20 – 6,70 A, size 100 + 112 | 10-936 06 215 |
| 6,20 – 10,00 A, size 100 + 112 | 10-936 06 216 |

# Progressive cavity pumps F 580 - for dry installation (TR)



## VISCOPOWER pumps F 580 with motor flange

- **open mechanical seal,** FKM seal, stator material PTFE, cardan shaft

| immersion depth [mm] | rotor geometry | connection pump tube | part no. |
|---|---|---|---|
| 400 mm | R52 | Clamp | 12-580 00 019 |

- **open mechanical seal, ex-protected,** NBR seal, stator material PTFE ATEX, cardan shaft, with ex approval, ex marking II 1/2 G Ex h IIB T4...T3 Ga/Gb

| immersion depth [mm] | rotor geometry | connection pump tube | part no. |
|---|---|---|---|
| 400 mm | R52 | Clamp | 12-580 00 021 |

- **closed mechanical seal,** FKM seal, stator material PTFE, cardan shaft, for food contact according to regulation (EC) 1935/2004 and FDA CFR 21

| immersion depth [mm] | rotor geometry | connection pump tube | part no. |
|---|---|---|---|
| 400 mm | R52 | Clamp | 12-580 00 020 |

## Drive motors with foot flange

image similar

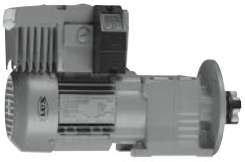

- **three-phase motor** 230/400 V, 50 Hz, IP 55, motor protection switch, without cable

| | A | part no. |
|---|---|---|
| 0,75 kW, 750 rpm | 2,70 | 10-001 02 176 |
| 1,1 kW, 1.000 rpm | 2,85 | 10-001 03 448 |

- **spur wheel back-geared motor with** frequency regulation voltage 380 - 500 V, 50/60 Hz, IP 54

| | A | version | part no. |
|---|---|---|---|
| 0,55 kW, 47 – 472 rpm | 1,60 | without foot flange | 10-001 02 178 |
| | | with foot flange | 10-001 02 179 |

- **start / stop switch for spur wheel back-geared motor** with frequency regulation and attached set point adjuster

| | part no. |
|---|---|
| switching voltage 24 V DC, IP 66, with 1 m spiral cable | 10-936 00 040 |

other motors on request

## Base plate and pump trolley

| | part no. |
|---|---|
| stainless steel base plate | 10-001 15 033 |
| stainless steel pump trolley with electrically conductive rollers | 10-001 15 051 |

- **fixing support** for motor mounted on pump trolley or base plate

| | part no. |
|---|---|
| | 10-001 15 037 |

Pump trolley with pump F 580

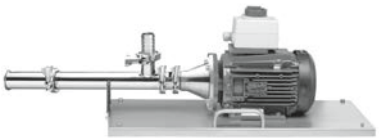

console with pump F 580

other TR versions on request

# Drum-emptying systems
## VISCOFLUX

# VISCOFLUX lite

For transferring high-viscosity media that are just capable of flowing

Consisting of: pump centring plate and follower plate with flexible process seal

For use with FLUX progressive cavity pump VISCOPOWER, 1.000 mm long, diameter 53 mm

**Designed for 200 liter ISO drum with an inside diameter of 571,5 mm**

### VISCOFLUX lite

| | part no. |
|---|---|
| pump centring plate (PE) and follower plate (stainless steel 316 Ti, 6 hole pattern) | 10-001 22 470 |

suitable process seals (6 hole pattern)

| | part no. |
|---|---|
| NBR white | 10-925 89 005 |
| NBR black | 10-925 89 006 |
| FKM | 10-925 89 007 |

### VISCOFLUX lite Ex

Ex-marking:II 1G Ex h IIB T6...T4 Ga

| | part no. |
|---|---|
| pump centring plate (PE conductive) and follower plate (stainless steel, 5 hole pattern) | 10-001 22 480 |

suitable set of seals (comprising process seal and O-ring)

| | part no. |
|---|---|
| NBR conductive | 10-925 89 065 |
| EPDM conductive | 10-925 89 066 |

illustration with pump and motor

**suitable pumps see page 42, 45, 46**

# VISCOFLUX mobile S

## The stand-alone solution for transferring high-viscosity fluids

The portable drum emptying system for ISO drums with lid. Consisting of a process device with integrated moving sledge and lifting sledge as well as a driving unit. The process device is complete in stainlees steel and with protection class IP 66.

The drum emptying system is available for the following drums:

- cylindrical with internal diameter 571,5 mm
- cylindrical with internal diameter 560 mm
- conical with internal diameter top 550 mm, bottom 515 mm
- with a smaller opening at the top 540 mm, bottom 571,5 mm (sea containers drums)

- **process device for three-phase motors**

| version PFC-S (Pharma, Food, Cosmetic) | part no. |
|---|---|
| with trolley 470 mm for euro pallets | 10-001 22 425 |
| with trolley 890 mm for freestanding drums and universal pallets for 4 drums | 10-001 22 426 |

- **process device for compressed-air motors**

| version PFC-S (Pharma, Food, Cosmetic) | part no. |
|---|---|
| with trolley 470 mm for euro pallets | 10-001 22 456 |
| with trolley 890 mm for freestanding drums and universal pallets for 4 drums | 10-001 22 457 |

- **follower plate** in stainless steel (without process seal)

| | part no. |
|---|---|
| for drums Ø 560 mm and Ø 571,5 mm | 10-001 22 324 |
| for conical drums Ø 550 mm above, Ø 515 mm below | 10-001 22 304 |
| for drums with smaller opening at the top Ø 540 mm, below Ø 571 mm | 10-001 22 357 |

- **follower plate** in stainless steel **with Inliner suction protection** (without process seal)

| | part no. |
|---|---|
| for drums Ø 560 mm and Ø 571,5 mm | 10-001 22 393 |
| for conical drums Ø 550 mm above, Ø 515 mm below | 10-001 22 394 |

illustration with pump and motor

- **process seals**

| for drum type | material | regulation | part no. |
|---|---|---|---|
| Ø 560 mm | FKM | | 10-925 89 030 |
| Ø 560 mm | NBR white | FDA conform, (EC) No. 1935/2004 | 10-925 89 032 |
| Ø 560 mm | NBR white | FDA conform, (EC) No. 1935/2004 | 10-925 89 035 |
| Ø 571 mm | FKM | | 10-925 89 031 |
| Ø 571 mm | NBR white | FDA conform, (EC) No. 1935/2004 | 10-925 89 033 |
| Ø 571 mm | NBR white | FDA conform, (EC) No. 1935/2004 | 10-925 89 036 |
| conical drum | NBR white | FDA conform, (EC) No. 1935/2004 | 10-925 89 060 |
| conical drum | NBR white | FDA conform, (EC) No. 1935/2004 | 10-925 89 061 |
| with smaller opening | NBR white | FDA conform, (EC) No. 1935/2004 | 10-925 89 039 |
| with smaller opening | NBR white | FDA conform, (EC) No. 1935/2004 | 10-925 89 040 |

**suitable pumps see page 58**

- **optional accessories for VISCOFLUX mobile S**

| blind cover clamp for follower plate | part no. |
|---|---|
| Clamp DN 10 | 10-001 22 355 |
| Clamp 2“ | 10-001 22 356 |

| trolley (interchangeable) | part no. |
|---|---|
| 470 mm | 10-001 22 431 |
| 890 mm | 10-001 22 432 |

blind cover

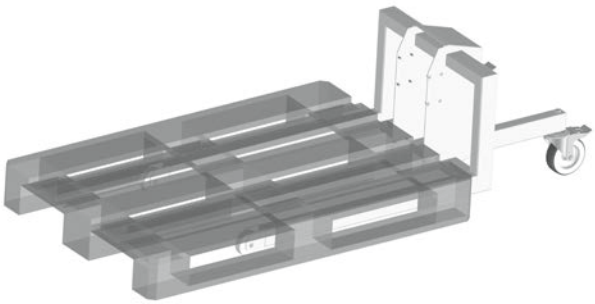

trolley 470 mm for drums on europallets

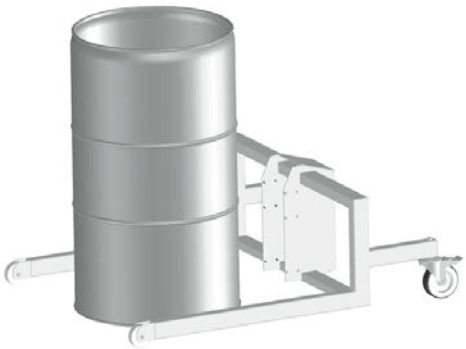

trolley 890 mm for freestanding drums
and for universal pallets for 4 barrels

VISCOFLUX

## Control options VISCOFLUX mobile S

- **with motor protection switch, protection class IP 65**
  with main / emergency stop switch

| | adjustment range | part no. |
|---|---|---|
| without no-volt protection | 1,8 - 3,0 A | 10-936 06 196 |
| | 2,8 - 4,6 A | 10-936 06 197 |
| | 4,2 - 6,7 A | 10-936 06 204 |
| with no-volt protection | 1,8 - 3,0 A | 10-936 06 198 |
| | 2,8 - 4,6 A | 10-936 06 199 |

- **cabinet for three-phase motors with 400 V without speed control with motor start/stop button, with end position warning light, with emergency switch**

| | part no. |
|---|---|
| without FLUXTRONIC® | 10-936 13 028 |
| with FLUXTRONIC® for batch operation | 10-936 13 029 |

- **cabinet for spur-gear motor with frequency converter with 400 V with speed control, with motor start/stop button, with end position warning light, with emergency switch**

| | part no. |
|---|---|
| without FLUXTRONIC® | 10-936 13 030 |
| with FLUXTRONIC® for batch operation | 10-936 13 031 |

- **optional accessory for VISCOFLUX mobile S with cabinet**
  end position switch with tension spring and fixing support, protection class IP 67

| nominal voltage | nominal current | part no. |
|---|---|---|
| max. 400 V | max. 4 A | 10-001 22 447 |

end position switch

## Hoses

- DN 38, outer Ø 51 mm, (product sold by meter – we recommend 3 m)

| | operating pressure max. | part no. |
|---|---|---|
| petroleum hose | 25 bar | 10-001 10 004 |
| special foodgrade hose | 16 bar | 10-001 10 023 |
| hose for food and chemistry | 16 bar | 10-001 10 086 |

## Swaged hose fittings DN 38

| material | nominal Ø | seal | part no. |
|---|---|---|---|
| brass | G 1 ½" female | | 10-959 13 143 |
| stainless steel | G 1 ½" female | | 10-959 13 147 |
| stainless steel | Clamp 2" | FKM (FOOD) | 10-959 13 362 |
| stainless steel | Clamp 2" | NBR (FOOD) | 10-959 13 363 |

## Discharge spout

- in stainless steel 316 Ti, suitable for food contact according to regulation (EC) 1935/2004 and FDA CFR 21

| | nominal Ø | part no. |
|---|---|---|
| with holder | Clamp 2" | 10-959 07 046 |
| without holder | Clamp 2" | 10-959 07 036 |

- accessories for discharge spout

| | part no. |
|---|---|
| holder for spout | 10-001 22 440 |
| cardan clip for Clamp 2" | 10-550 24 376 |
| seal for Clamp 2", EPDM (with FDA/FOOD approval) | 10-925 89 059 |
| seal for Clamp 2", FKM (with FDA/FOOD approval) | 10-925 89 023 |
| sealing ring Clamp 2", PTFE | 10-925 89 008 |
| sealing ring Clamp 2", NBR white | 10-925 89 010 |

## Discharge spout

- in stainless steel 316 Ti, for non-food contact

| | nominal Ø | part no. |
|---|---|---|
| without holder | G 1 ½" A female | 10-959 07 043 |

**suitable digital display FLUXTRONIC®** suitable for VISCOPOWER pumps F 580 with motor flange and integrated pulser

| | part no. |
|---|---|
| with mounting flange, without cable | 10-001 42 113 |

**sensor cable** for VISCOPOWER with pulser

| | part no. |
|---|---|
| 5 m long, for connection of sensor and evaluation unit FLUXTRONIC® | 11-000 00 192 |

# Progressive cavity pumps VISCOPOWER

for VISCOFLUX mobile S

## Progressive cavity pumps VISCOPOWER F 580 with motor flange

- **open mechanical seal,** FKM seal, torsion shaft, stator material NBR

| immersion depth [mm] | rotor geometry | speed sensor | part no. |
|---|---|---|---|
| 1.000 mm | R52 | no | 12-580 00 034 |
| 1.200 mm | R52 | yes | 12-580 00 058 |

- **open mechanical seal,** FKM seal, torsion shaft, stator material PTFE

| immersion depth [mm] | rotor geometry | speed sensor | part no. |
|---|---|---|---|
| 1.200 mm | R52 | no | 12-580 00 073 |

- **closed mechanical seal,** FKM seal, torsion shaft, stator material NBR, suitable for food contact according to Regulation (EC) 1935/2004 and FDA CFR 21

| immersion depth [mm] | rotor geometry | speed sensor | part no. |
|---|---|---|---|
| 1.000 mm | R52 | no | 12-580 00 041 |
| 1.200 mm | R52 | no | 12-580 00 057 |
| 1.200 mm | R52 | yes | 12-580 00 060 |

- **closed mechanical seal,** FKM seal, torsion shaft, stator material PTFE, suitable for food contact according to Regulation (EC) 1935/2004 and FDA CFR 21

| immersion depth [mm] | rotor geometry | speed sensor | part no. |
|---|---|---|---|
| 1.000 mm | R52 | no | 12-580 00 061 |
| 1.200 mm | R52 | no | 12-580 00 024 |
| 1.200 mm | R52 | yes | 12-580 00 098 |

VISCOFLUX

## Drive motors for VISCOFLUX mobile S

- **three-phase motors 230 / 400 V, 50 Hz, jet-proof to IP 55, IE3, with cable terminal box**

| kW | rpm | A | part no. |
|---|---|---|---|
| 0,75 | 750 | 2,70 | 10-001 01 588 |
| 1,1 | 750 | 3,45 | 10-001 01 589 |
| 0,75 | 1.000 | 1,96 | 10-001 03 442 |
| 1,1 | 1.000 | 2,85 | 10-001 03 444 |

image similar

- **spur wheel back-geared motor**
  400 V, 100 Hz, jet-proof to IP 54, IE3
  (The setpoint adjuster for control cabinet mounting is not included)

| kW | rpm | A | part no. |
|---|---|---|---|
| 0,75 | 82-817 | 1,90 | 10-001 02 180 |

- **compressed-air motor***, explosion-proof, with exhaust silencer

| | part no. |
|---|---|
| FPM 4 Ex, 0,6 kW at 1.000 rpm | 10-001 04 000 |
| FPM 6 Ex, 1,2 kW at 1.000 rpm | 10-001 04 014 |
| FPM 8 Ex, 2,0 kW at 1.000 rpm | 10-001 04 002 |

FPM 4 Ex

# Flow meter FMC

nutating disc type

# Flow meter FMC

nutating disc type

Flow meter for applications in Zone 1, Ex-marking II 2 G Ex ia IIB T6 Gb

FLUX flow meters in impulse version without digital display FLUXTRONIC® do not need an Ex certification, because this is a component that has no own potential source of ignition.

## FMC 100, material: polypropylene (PP)

### for portable use with drum pumps

- with digital display FLUXTRONIC®, thread connection: inlet G 1¼" female, outlet G 1¼" male

| | O-ring | part no. |
|---|---|---|
| FMC 100/PP/0/F | EPDM | 10-A04 00 005 |
| FMC 100/PP/1/F | FKM | 10-A04 00 007 |
| FMC 100/PP/2/F | FEP | 10-A04 00 009 |

- impulse version without digital display, for use with hand nozzle, with impulse cable, 5 m long, thread connection inlet G 1¼" female, outlet G 1¼" male

| | O-ring | part no. |
|---|---|---|
| FMC 100/PP/0/F | EPDM | 10-A04 00 035 |
| FMC 100/PP/1/F | FKM | 10-A04 00 037 |
| FMC 100/PP/2/F | FEP | 10-A04 00 039 |

- hand nozzle polypropylene (PP) with digital display FLUXTRONIC®

| nominal Ø | O-ring | part no. |
|---|---|---|
| DN 19 | FKM | 10-001 12 531 |
| DN 25 | FKM | 10-001 12 535 |
| DN 25, Ø 28 | FKM | 10-001 12 565 |

### for stationary use - fixed installation into pipeline

- with digital display FLUXTRONIC®, thread connection on both sides G 1½" male

| | O-ring | part no. |
|---|---|---|
| FMC 100/PP/0/A | EPDM | 10-A04 00 012 |
| FMC 100/PP/1/A | FKM | 10-A04 00 014 |
| FMC 100/PP/2/A | FEP | 10-A04 00 016 |

- impulse version without digital display, for use with external digital display FLUXTRONIC®, with impulse cable, 5 m long, thread connection on both sides G 1½" male

| | O-ring | part no. |
|---|---|---|
| FMC 100/PP/0/A | EPDM | 10-A04 00 041 |
| FMC 100/PP/1/A | FKM | 10-A04 00 043 |
| FMC 100/PP/2/A | FEP | 10-A04 00 045 |

external digital display FLUXTRONIC® see page 62

## FMC 100, material: ethylene-tetrafluorethylene (ETFE)

### for portable use with drum pumps

- with digital display FLUXTRONIC®, thread connection: inlet G 1¼" female, outlet G 1¼" male

| | O-ring | part no. |
|---|---|---|
| FMC 100/ETFE/0/F | EPDM | 10-A04 00 006 |
| FMC 100/ETFE/1/F | FKM | 10-A04 00 008 |
| FMC 100/ETFE/3/F | FFKM | 10-A04 00 077 |

- impulse version without digital display, for use with hand nozzle, with impulse cable, 5 m long, thread connection inlet G 1¼ mn ,kmmmmmmmk km44

| | O-ring | part no. |
|---|---|---|
| FMC 100/ETFE/0/F | EPDM | 10-A04 00 036 |
| FMC 100/ETFE/1/F | FKM | 10-A04 00 038 |
| FMC 100/ETFE/3/F | FFKM | 10-A04 00 079 |

- hand nozzle polyvinylidene fluoride (PVDF) with digital display FLUXTRONIC®

| connection | O-ring | part no. |
|---|---|---|
| DN 19 | FKM | 10-001 12 532 |
| DN 25 | FKM | 10-001 12 536 |
| DN 25, Ø 28 | FKM | 10-001 12 566 |

## for stationary use - fixed installation into pipeline

- with digital display FLUXTRONIC®, thread connection on both sides G 1½" male

| | O-ring | part no. |
|---|---|---|
| FMC 100/ETFE/0/A | EPDM | 10-A04 00 013 |
| FMC 100/ETFE/1/A | FKM | 10-A04 00 015 |
| FMC 100/ETFE/3/A | FFKM | 10-A04 00 078 |

- impulse version without digital display, for use with external digital display FLUXTRONIC®, with impulse cable, 5 m long, thread connection on both sides G 1½" male

| | O-ring | part no. |
|---|---|---|
| FMC 100/ETFE/0/A | EPDM | 10-A04 00 042 |
| FMC 100/ETFE/1/A | FKM | 10-A04 00 044 |
| FMC 100/ETFE/3/A | FFKM | 10-A04 00 080 |

external digital display FLUXTRONIC® see page 62

## FMC 100, material: stainless steel (S)

### for portable use with drum pumps

- with digital display FLUXTRONIC®, thread connection: inlet G 1½" male, outlet G 1¼" male

| | O-ring | part no. |
|---|---|---|
| FMC 100/S/0/F | EPDM | 10-A04 00 029 |
| FMC 100/S/1/F | FKM | 10-A04 00 031 |
| FMC 100/S/2/F | FEP | 10-A04 00 033 |

- impulse version without digital display, for use with hand nozzle, with impulse cable, 5 m long, thread connection inlet G 1¼" male, outlet G 1¼" male

| | O-ring | part no. |
|---|---|---|
| FMC 100/S/0/F | EPDM | 10-A04 00 053 |
| FMC 100/S/1/F | FKM | 10-A04 00 055 |
| FMC 100/S/2/F | FEP | 10-A04 00 057 |

- hand nozzle stainless steel (S) with digital display FLUXTRONIC®

| nominal Ø | O-ring | part no. |
|---|---|---|
| Ø 28 | PTFE/FEP | 10-001 12 550 |

- hand nozzle nickel-plated brass (MS) with digital display FLUXTRONIC®

| nominal Ø | O-ring | part no. |
|---|---|---|
| Ø 32 | PTFE | 10-001 12 364 |

- connecting piece in stainless steel

| | nominal Ø | part no. |
|---|---|---|
| for FLUX drum pumps | G 1¼" female - G 1½" female | 10-959 06 059 |
| for FLUX progressive cavity pumps | G 1½" female - G 1½" female | 10-959 06 061 |

## for stationary use - fixed installation into pipeline, with digital display FLUXTRONIC®

- G 1" female thread connection on both sides

| | O-ring | part no. |
|---|---|---|
| FMC 100/S/0/A | EPDM | 10-A04 00 085 |
| FMC 100/S/1/A | FKM | 10-A04 00 086 |
| FMC 100/S/2/A | FEP | 10-A04 00 087 |

- thread connection on both sides G 1½" male

| | O-ring | part no. |
|---|---|---|
| FMC 100/S/0/A | EPDM | 10-A04 00 071 |
| FMC 100/S/1/A | FKM | 10-A04 00 072 |
| FMC 100/S/2/A | FEP | 10-A04 00 073 |

# Flow meter FMC/FMJ

nutating disc type

- flange connector on both sides outer Ø 115 mm, PC Ø 85 mm, 4 bores Ø 14 mm

| | O-ring | part no. |
|---|---|---|
| FMC 100/S/0/A | EPDM | 10-A04 00 082 |
| FMC 100/S/1/A | FKM | 10-A04 00 083 |
| FMC 100/S/2/A | FEP | 10-A04 00 084 |

- thread connection on both sides Rd 65 x 1/6

| | O-ring | part no. |
|---|---|---|
| FMC 100/S/0/A | EPDM | 10-A04 00 023 |
| FMC 100/S/1/A | FKM | 10-A04 00 025 |
| FMC 100/S/2/A | FEP | 10-A04 00 027 |

**impulse version without digital display**

for use with external digital display FLUXTRONIC®, with impulse cable, 5 m long

- thread connection on both sides G 1¼“ male

| | O-ring | part no. |
|---|---|---|
| FMC 100/S/0/A | EPDM | 10-A04 00 074 |
| FMC 100/S/1/A | FKM | 10-A04 00 075 |
| FMC 100/S/2/A | FEP | 10-A04 00 076 |

- thread connection on both sides Rd 65 x 1/6

| | O-ring | part no. |
|---|---|---|
| FMC 100/S/0/A | EPDM | 10-A04 00 059 |
| FMC 100/S/1/A | FKM | 10-A04 00 061 |
| FMC 100/S/2/A | FEP | 10-A04 00 063 |

**external digital display FLUXTRONIC®**

| | part no. |
|---|---|
| with mounting flange, without cable | 10-001 42 113 |

**FMC 250, for stationary use – fixed installation into pipeline, with digital display FLUXTRONIC®**

- polypropylene, thread connection on both sides, G 2¼” male

| | O-ring | part no. |
|---|---|---|
| FMC 250/PP/0/A | EPDM | 10-A04 25 400 |
| FMC 250/PP/1/A | FKM | 10-A04 25 410 |

- polyvinylidene fluoride, thread connection on both sides G 2¼” male

| | O-ring | part no. |
|---|---|---|
| FMC 250/PVDF/0/A | EPDM | 10-A04 25 600 |
| FMC 250/PVDF/1/A | FKM | 10-A04 25 610 |

**FMJ 100, material polypropylene, with digital display FLUXTRONIC®, for flexible use with drum pumps and for manual use (no batch-control possible), not exposion-proof**

- thread connection inlet G 2” male, outlet G 1¼” male (with connecting piece)

| | O-ring | part no. |
|---|---|---|
| FMJ 100/PP/1/F | FKM | 10-A04 00 088 |

**Accessories for FMC see page 70-71**

**Connectors (according to standards) for pipeline construction on request**

# Flow meter FMO

oval rotor type

# Flow meter FMO

oval rotor type

### FMO 101 and FMO 102
### with impulse output, without digital display FLUXTRONIC®, in PVDF, thread connection both sides G ¼ female, Reed/Hall Sensor

- **for thin-flowing substances** up to 1.000 cP

| | housing | oval rotors | O-ring | part no. |
|---|---|---|---|---|
| FMO 101/P/P/0 | PVDF | PPS | EPDM | 10-AB6 01 400 |
| FMO 101/P/P/1 | PVDF | PPS | FKM | 10-AB6 01 410 |
| FMO 101/P/P/2 | PVDF | PPS | FFKM | 10-AB6 01 420 |
| FMO 101/P/S/0 | PVDF | S | EPDM | 10-AB6 01 100 |
| FMO 101/P/S/1 | PVDF | S | FKM | 10-AB6 01 110 |
| FMO 101/P/S/2 | PVDF | S | FFKM | 10-AB6 01 120 |
| FMO 102/P/P/0 | PVDF | PPS | EPDM | 10-AB6 02 400 |
| FMO 102/P/P/1 | PVDF | PPS | FKM | 10-AB6 02 410 |
| FMO 102/P/P/2 | PVDF | PPS | FFKM | 10-AB6 02 420 |
| FMO 102/P/S/0 | PVDF | S | EPDM | 10-AB6 02 100 |
| FMO 102/P/S/1 | PVDF | S | FKM | 10-AB6 02 110 |
| FMO 102/P/S/2 | PVDF | S | FFKM | 10-AB6 02 120 |

- **connecting piece for** FMO 101 and FMO 102 in PVDF

  **double nipple** (only in conjunction with one of the following flat seals)

| | material | connection | part no. |
|---|---|---|---|
| | S | G ¼“ male | 10-959 06 259 |

| | material | part no. |
|---|---|---|
| flat seal | HD-PE | 10-925 24 015 |
| flat seal | FKM | 10-925 24 016 |
| flat seal | FFKM | 10-925 24 017 |
| flat seal | PTFE | 10-925 24 018 |

Flow meter

### FMO 101 and FMO 102 for applications in Zone 1
### Ex-marking II 2G Ex h IIB T4 Gb
### with impulse output, without digital display FLUXTRONIC®, in stainless steel (S), thread connection G ¼, Reed/Hall sensor (in hazardous areas only with Reed sensor)

- **for thin-flowing substances** up to 1.000 cP

| | housing | oval rotors | O-ring | part no. |
|---|---|---|---|---|
| FMO 101/S/S/0 | S | S | EPDM | 10-AB6 01 300 |
| FMO 101/S/S/1 | S | S | FKM | 10-AB6 01 310 |
| FMO 101/S/S/2 | S | S | FFKM | 10-AB6 01 320 |
| FMO 102/S/S/0 | S | S | EPDM | 10-AB6 02 300 |
| FMO 102/S/S/1 | S | S | FKM | 10-AB6 02 310 |
| FMO 102/S/S/2 | S | S | FFKM | 10-AB6 02 320 |

- digital display FLUXTRONIC® for FMO 101 and FMO 102
  Ex-marking Ex II 2G Ex ia IIB T6 Gb

| | part no. |
|---|---|
| with attachment flange and 5 m impulse cable with plug | 10-001 42 111 |

- **connecting piece for** FMO 101 and FMO 102 in PVDF

  **double nipple** (only in conjunction with one of the following flat seals)

| | material | connection | part no. |
|---|---|---|---|
| | S | G ¼“ male | 10-959 06 262 |

## FMO 104 for applications in Zone 1
## Ex-marking FMO II 2G Ex h IIB T4 Gb, Ex-marking FLUXTRONIC® II 2G Ex ia IIB T6 Gb, in aluminium (AL) or stainless steel (S), thread connection both sides G ½ female, Reed/Reed Sensor

**for thin-flowing substances** up to 1.000 cP

- with digital display FLUXTRONIC®, 5-pole socket

| | housing | oval rotors | O-ring | part no. |
|---|---|---|---|---|
| FMO 104/AL/P/0 | AL | PPS | EPDM | 10-A06 04 100 |
| FMO 104/AL/P/1 | AL | PPS | FKM | 10-A06 04 110 |
| FMO 104/AL/P/2 | AL | PPS | FFKM | 10-A06 04 120 |
| FMO 104/S/P/0 | S | PPS | EPDM | 10-A06 04 200 |
| FMO 104/S/P/1 | S | PPS | FKM | 10-A06 04 210 |
| FMO 104/S/P/2 | S | PPS | FFKM | 10-A06 04 220 |
| FMO 104/S/S/0 | S | S | EPDM | 10-A06 04 300 |
| FMO 104/S/S/1 | S | S | FKM | 10-A06 04 310 |
| FMO 104/S/S/2 | S | S | FFKM | 10-A06 04 320 |

FMO 104 with FLUXTRONIC®

- impulse version, without digital display FLUXTRONIC®

| | housing | oval rotors | O-ring | part no. |
|---|---|---|---|---|
| FMO 104/AL/P/0 | AL | PPS | EPDM | 10-AB6 04 100 |
| FMO 104/AL/P/1 | AL | PPS | FKM | 10-AB6 04 110 |
| FMO 104/AL/P/2 | AL | PPS | FFKM | 10-AB6 04 120 |
| FMO 104/S/P/0 | S | PPS | EPDM | 10-AB6 04 200 |
| FMO 104/S/P/1 | S | PPS | FKM | 10-AB6 04 210 |
| FMO 104/S/P/2 | S | PPS | FFKM | 10-AB6 04 220 |
| FMO 104/S/S/0 | S | S | EPDM | 10-AB6 04 300 |
| FMO 104/S/S/1 | S | S | FKM | 10-AB6 04 310 |
| FMO 104/S/S/2 | S | S | FFKM | 10-AB6 04 320 |

**for high viscosity substances** from 1.000 cP

- with digital display FLUXTRONIC®, 5-pole socket

| | housing | oval rotors | O-ring | part no. |
|---|---|---|---|---|
| FMO 104/AL/PV/0 | AL | PPS | EPDM | 10-A06 04 105 |
| FMO 104/AL/PV/1 | AL | PPS | FKM | 10-A06 04 115 |
| FMO 104/AL/PV/2 | AL | PPS | FFKM | 10-A06 04 125 |
| FMO 104/S/PV/0 | S | PPS | EPDM | 10-A06 04 205 |
| FMO 104/S/PV/1 | S | PPS | FKM | 10-A06 04 215 |
| FMO 104/S/PV/2 | S | PPS | FFKM | 10-A06 04 225 |
| FMO 104/S/SV/0 | S | S | EPDM | 10-A06 04 305 |
| FMO 104/S/SV/1 | S | S | FKM | 10-A06 04 315 |
| FMO 104/S/SV/2 | S | S | FFKM | 10-A06 04 325 |

- in impulse version, without digital display FLUXTRONIC®

| | housing | oval rotors | O-ring | part no. |
|---|---|---|---|---|
| FMO 104/AL/PV/0 | AL | PPS | EPDM | 10-AB6 04 105 |
| FMO 104/AL/PV/1 | AL | PPS | FKM | 10-AB6 04 115 |
| FMO 104/AL/PV/2 | AL | PPS | FFKM | 10-AB6 04 125 |
| FMO 104/S/PV/0 | S | PPS | EPDM | 10-AB6 04 205 |
| FMO 104/S/PV/1 | S | PPS | FKM | 10-AB6 04 215 |
| FMO 104/S/PV/2 | S | PPS | FFKM | 10-AB6 04 225 |
| FMO 104/S/SV/0 | S | S | EPDM | 10-AB6 04 305 |
| FMO 104/S/SV/1 | S | S | FKM | 10-AB6 04 315 |
| FMO 104/S/SV/2 | S | S | FFKM | 10-AB6 04 325 |

FMO 104 in impulse version

- **connecting pieces** for FMO 104

**FLUX drum pump - FMO 104**

| for use with | material | connection | part no. |
|---|---|---|---|
| FLUX drum pumps | S | G 1 ½“ male – G 1 ¼“ female | 10-959 06 227 |
| FLUX progressive cavity pumps | S | G 1 ½“ male – G 1 ½“ female | 10-959 06 225 |

**FMO 104 - hose connection**

| for use with | material | connection | part no. |
|---|---|---|---|
| hose connection drum pumps | S | G ½“ male – G 1 ¼“ male | 10-959 06 232 |
| hose connection progressive cavity pumps | S | G ½“ male – G 1 ½“ male | 10-959 06 233 |

**double nipple**

| | material | connection | part no. |
|---|---|---|---|
| | S | G ¼“male | 10-959 06 263 |

# Flow meter FMO

oval rotor type

## FMO 110
## in PVDF, thread connection on both sides G 1“ female, Reed/Reed sensor

**for thin-flowing substances** up to 1.000 cP

- with digital display FLUXTRONIC®, 5-pole socket

| | housing | oval rotors | O-ring | part no. |
|---|---|---|---|---|
| FMO 110/P/P/0 | PVDF | PPS | EPDM | 10-A06 10 400 |
| FMO 110/P/P/1 | PVDF | PPS | FKM | 10-A06 10 410 |
| FMO 110/P/P/2 | PVDF | PPS | FFKM | 10-A06 10 420 |

- impulse version, without digital display FLUXTRONIC®

| | housing | oval rotors | O-ring | part no. |
|---|---|---|---|---|
| FMO 110/P/P/0 | PVDF | PPS | EPDM | 10-AB6 10 400 |
| FMO 110/P/P/1 | PVDF | PPS | FKM | 10-AB6 10 410 |
| FMO 110/P/P/2 | PVDF | PPS | FFKM | 10-AB6 10 420 |

FMO 110 in impulse version

- **connecting pieces** for FMO 110 in PVDF

**FLUX-pump - FMO 110**

| for use with | material | connection | part no. |
|---|---|---|---|
| drum pump | PVDF | G 1 male – G 1¼ female | 10-959 06 145 |
| hose connection drum pump | PVDF | G 1 male – G ¼ male | 10-959 06 236 |

**double nipple** (only in conjunction with one of the following flat seals)

| | material | connection | part no. |
|---|---|---|---|
| | PVDF | G 1 male | 10-959 06 261 |

| | material | part no. |
|---|---|---|
| flat seal | HD-PE | 10-925 64 028 |
| flat seal | FKM | 10-925 64 029 |
| flat seal | FFKM | 10-925 64 030 |
| flat seal | PTFE | 10-925 64 031 |

## FMO 110 for applications in Zone 1
## Ex-marking FMO II 2G Ex h IIB T4 Gb, Ex-marking FLUXTRONIC® II 2G Ex ia IIB T6 Gb, in aluminium (AL) or stainless steel (S), thread connection both sides G 1 female, Reed/Reed Sensor

**for thin-flowing substances** up to 1.000 cP

- with digital display FLUXTRONIC®, 5-pole socket

| | housing | oval rotors | O-ring | part no. |
|---|---|---|---|---|
| FMO 110/AL/P/0 | AL | PPS | EPDM | 10-A06 10 100 |
| FMO 110/AL/P/1 | AL | PPS | FKM | 10-A06 10 110 |
| FMO 110/AL/P/2 | AL | PPS | FFKM | 10-A06 10 120 |
| FMO 110/S/P/0 | S | PPS | EPDM | 10-A06 10 200 |
| FMO 110/S/P/1 | S | PPS | FKM | 10-A06 10 210 |
| FMO 110/S/P/2 | S | PPS | FFKM | 10-A06 10 220 |
| FMO 110/S/S/0 | S | S | EPDM | 10-A06 10 300 |
| FMO 110/S/S/1 | S | S | FKM | 10-A06 10 310 |
| FMO 110/S/S/2 | S | S | FFKM | 10-A06 10 320 |

FMO 110 with FLUXTRONIC®

- impulse version, without digital display FLUXTRONIC®

| | housing | oval rotors | O-ring | part no. |
|---|---|---|---|---|
| FMO 110/AL/P/0 | AL | PPS | EPDM | 10-AB6 10 100 |
| FMO 110/AL/P/1 | AL | PPS | FKM | 10-AB6 10 110 |
| FMO 110/AL/P/2 | AL | PPS | FFKM | 10-AB6 10 120 |
| FMO 110/S/P/0 | S | PPS | EPDM | 10-AB6 10 200 |
| FMO 110/S/P/1 | S | PPS | FKM | 10-AB6 10 210 |
| FMO 110/S/P/2 | S | PPS | FFKM | 10-AB6 10 220 |
| FMO 110/S/S/0 | S | S | EPDM | 10-AB6 10 300 |
| FMO 110/S/S/1 | S | S | FKM | 10-AB6 10 310 |
| FMO 110/S/S/2 | S | S | FFKM | 10-AB6 10 320 |

FMO 110 in impulse version

**Additional price 60,00 € for FMO 104-150 with platine with Hall-Sensor instead of platine with Reed/Reed**

not suitable for use in hazardous areas

**for high viscosity substances** from 1.000 cP

- with digital display FLUXTRONIC®, 5-pole socket

| | housing | oval rotors | O-ring | part no. |
|---|---|---|---|---|
| FMO 110/AL/PV/0 | AL | PPS | EPDM | 10-A06 10 105 |
| FMO 110/AL/PV/1 | AL | PPS | FKM | 10-A06 10 115 |
| FMO 110/AL/PV/2 | AL | PPS | FFKM | 10-A06 10 125 |
| FMO 110/S/PV/0 | S | PPS | EPDM | 10-A06 10 205 |
| FMO 110/S/PV/1 | S | PPS | FKM | 10-A06 10 215 |
| FMO 110/S/PV/2 | S | PPS | FFKM | 10-A06 10 225 |
| FMO 110/S/SV/0 | S | S | EPDM | 10-A06 10 305 |
| FMO 110/S/SV/1 | S | S | FKM | 10-A06 10 315 |
| FMO 110/S/SV/2 | S | S | FFKM | 10-A06 10 325 |

- pulse version, without digital display FLUXTRONIC®

| | housing | oval rotors | O-ring | part no. |
|---|---|---|---|---|
| FMO 110/AL/PV/0 | AL | PPS | EPDM | 10-AB6 10 105 |
| FMO 110/AL/PV/1 | AL | PPS | FKM | 10-AB6 10 115 |
| FMO 110/AL/PV/2 | AL | PPS | FFKM | 10-AB6 10 125 |
| FMO 110/S/PV/0 | S | PPS | EPDM | 10-AB6 10 205 |
| FMO 110/S/PV/1 | S | PPS | FKM | 10-AB6 10 215 |
| FMO 110/S/PV/2 | S | PPS | FFKM | 10-AB6 10 225 |
| FMO 110/S/SV/0 | S | S | EPDM | 10-AB6 10 305 |
| FMO 110/S/SV/1 | S | S | FKM | 10-AB6 10 315 |
| FMO 110/S/SV/2 | S | S | FFKM | 10-AB6 10 325 |

- **connecting pieces** for FMO 110 in stainless steel

**FLUX drum pumps - FMO 110**

| for use with | material | connection | part no. |
|---|---|---|---|
| drum pumps | S | G 1 male – G 1¼ female | 10-959 06 144 |
| progressive cavity pump | S | G 1 male – G 1½ female | 10-959 06 122 |

**FMO 110 - hose connection**

| for use with | material | connection | part no. |
|---|---|---|---|
| hose connection drum pump | S | G 1 male – G 1¼ male | 10-959 06 234 |
| hose connection progressive cavity pump | S | G 1 male – G 1½ male | 10-959 06 235 |

**double nipple**

| | material | connection | part no. |
|---|---|---|---|
| | S | G 1 male | 10-959 06 264 |

# Flow meter FMO

oval rotor type

**FMO 110 for applications in Zone 1**
**Ex-marking FMO II 2G Ex h IIB T4 Gb, Ex-marking FLUXTRONIC® II 2G Ex ia IIB T6 Gb,**

Image similar

**with flange connection, Reed/Reed sensor**
**for thin-flowing substances** up to 1.000 cP

- with digital display FLUXTRONIC®, 5-pole socket

| with flange connection PN 16 DN 25 on both sides | housing | oval rotors | O-ring | part no. |
|---|---|---|---|---|
| FMO 110/S/S/1 | S | S | FKM | 10-A06 10 111 |
| FMO 110/S/S/2 | S | S | FFKM | 10-A06 10 121 |

**with clamp connection, Reed/Reed sensor**
**for thin-flowing substances** up to 1.000 cP, suitable for food contact according to regulation (EC) 1935/2004 and FDA CFR 21, in stainless steel (S)

- with digital display FLUXTRONIC®, 5-pole socket

| clamp 1 ½“ connection on both sides | housing | oval rotors | O-ring | part no. |
|---|---|---|---|---|
| FMO 110/S/S/0 | S | S | EPDM | 10-A06 10 302 |
| FMO 110/S/S/1 | S | S | FKM | 10-A06 10 312 |

| clamp 2“ connection on both sides | housing | oval rotors | O-ring | part no. |
|---|---|---|---|---|
| FMO 110/S/S/0 | S | S | EPDM | 10-A06 10 303 |
| FMO 110/S/S/1 | S | S | FKM | 10-A06 10 313 |

**for high viscosity substances** from 1.000 cP

- with digital display FLUXTRONIC®, 5-pole socket

| clamp 2“ connection on both sides | housing | oval rotors | O-ring | part no. |
|---|---|---|---|---|
| FMO 110/S/SV/0 | S | S | EPDM | 10-A06 10 307 |
| FMO 110/S/SV/1 | S | S | FKM | 10-A06 10 317 |

**accessories for FMO 110 with clamp connection**

| seal pump/ flow meter | material | part no. |
|---|---|---|
| for clamp 1½“ | EPDM (with FDA/FOOD approval) | 10-925 69 017 |
| for clamp 1½“ | FKM (with FDA/FOOD approval) | 10-925 69 014 |
| for clamp 2“ | EPDM (with FDA/FOOD approval) | 10-925 89 059 |
| for clamp 2“ | FKM (with FDA/FOOD approval) | 10-925 89 023 |

| joint clamp | material | part no. |
|---|---|---|
| for clamp 1½“ | stainless steel | 10-430 21 019 |
| for clamp 2“ | stainless steel | 10-550 24 376 |

## FMO 140

**Ex-marking FMO II 2G Ex h IIB T4 Gb, Ex-marking FLUXTRONIC® II 2G Ex ia IIB T6 Gb, in aluminium (AL) or stainless steel (S), nominal pressure PN 16, nominal flange connection DN 40, EN 1092-1, Reed/Reed sensor**

**for thin-flowing substances** up to 1.000 cP

- with digital display FLUXTRONIC®, 5-pole socket

| | housing | oval rotors | O-ring | part no. |
|---|---|---|---|---|
| FMO 140/AL/P/0 | AL | PPS | EPDM | 10-A06 40 101 |
| FMO 140/AL/P/1 | AL | PPS | FKM | 10-A06 40 111 |
| FMO 140/AL/P/2 | AL | PPS | FFKM | 10-A06 40 121 |
| FMO 140/S/P/0 | S | PPS | EPDM | 10-A06 40 201 |
| FMO 140/S/P/1 | S | PPS | FKM | 10-A06 40 211 |
| FMO 140/S/P/2 | S | PPS | FFKM | 10-A06 40 221 |
| FMO 140/S/S/0 | S | S | EPDM | 10-A06 40 301 |
| FMO 140/S/S/1 | S | S | FKM | 10-A06 40 311 |
| FMO 140/S/S/2 | S | S | FFKM | 10-A06 40 321 |

**for high viscosity substances** from 1.000 cP

- with digital display FLUXTRONIC®, 5-pole socket

| | housing | oval rotors | O-ring | part no. |
|---|---|---|---|---|
| FMO 140/AL/PV/0 | AL | PPS | EPDM | 10-A06 40 106 |
| FMO 140/AL/PV/1 | AL | PPS | FKM | 10-A06 40 116 |
| FMO 140/AL/PV/2 | AL | PPS | FFKM | 10-A06 40 126 |
| FMO 140/S/PV/0 | S | PPS | EPDM | 10-A06 40 206 |
| FMO 140/S/PV/1 | S | PPS | FKM | 10-A06 40 216 |
| FMO 140/S/PV/2 | S | PPS | FFKM | 10-A06 40 226 |
| FMO 140/S/SV/0 | S | S | EPDM | 10-A06 40 306 |
| FMO 140/S/SV/1 | S | S | FKM | 10-A06 40 316 |
| FMO 140/S/SV/2 | S | S | FFKM | 10-A06 40 326 |

## FMO 150

**Ex-marking FMO II 2G Ex h IIB T4 Gb, Ex-marking FLUXTRONIC® II 2G Ex ia IIB T6 Gb, in aluminium (AL) or stainless steel (S), nominal pressure PN 16, nominal flange connection DN 50, EN 1092-1, Reed/Reed sensor**

**for thin-flowing substances** up to 1.000 cP

- with digital display FLUXTRONIC®, 5-pole socket

| | housing | oval rotors | O-ring | part no. |
|---|---|---|---|---|
| FMO 150/AL/P/0 | AL | PPS | EPDM | 10-A06 50 101 |
| FMO 150/AL/P/1 | AL | PPS | FKM | 10-A06 50 111 |
| FMO 150/AL/P/2 | AL | PPS | FFKM | 10-A06 50 121 |
| FMO 150/S/P/0 | S | PPS | EPDM | 10-A06 50 201 |
| FMO 150/S/P/1 | S | PPS | FKM | 10-A06 50 211 |
| FMO 150/S/P/2 | S | PPS | FFKM | 10-A06 50 221 |
| FMO 150/S/S/0 | S | S | EPDM | 10-A06 50 301 |
| FMO 150/S/S/1 | S | S | FKM | 10-A06 50 311 |
| FMO 150/S/S/2 | S | S | FFKM | 10-A06 50 321 |

**for high viscosity substances** from 1.000 cP

- with digital display FLUXTRONIC®, 5-pole socket

| | housing | oval rotors | O-ring | part no. |
|---|---|---|---|---|
| FMO 150/AL/PV/0 | AL | PPS | EPDM | 10-A06 50 106 |
| FMO 150/AL/PV/1 | AL | PPS | FKM | 10-A06 50 116 |
| FMO 150/AL/PV/2 | AL | PPS | FFKM | 10-A06 50 126 |
| FMO 150/S/PV/0 | S | PPS | EPDM | 10-A06 50 206 |
| FMO 150/S/PV/1 | S | PPS | FKM | 10-A06 50 216 |
| FMO 150/S/PV/2 | S | PPS | FFKM | 10-A06 50 226 |
| FMO 150/S/SV/0 | S | S | EPDM | 10-A06 50 306 |
| FMO 150/S/SV/1 | S | S | FKM | 10-A06 50 316 |
| FMO 150/S/SV/2 | S | S | FFKM | 10-A06 50 326 |

# Accessories for flow meter

- **impulse cable** for FMO 104 / FMO 110 version without digital display 2-core, both sides with wire sleeves, insulated to transmit control signal from FMO reed-relais to the external digital display FLUXTRONIC®

| | part no. |
|---|---|
| 5 m long | 10-934 08 032 |
| 10 m long | 10-934 08 033 |
| 15 m long | 10-934 08 034 |

- **connecting cable, shielded** for FMC / FMO to extend the impusle cable

| | part no. |
|---|---|
| 5 m long with plug and coupling | 10-934 08 039 |

- **external digital display FLUXTRONIC®**

| | part no. |
|---|---|
| with wall mounting flange, without cable | 10-001 42 113 |

- **clear protection cover for FLUXTRONIC® display**

| for | part no. |
|---|---|
| FMJ | 10-001 42 101 |
| FMC/FMO | 10-001 42 121 |

- **earth wire** for FMC PP and FMC ETFE to produce a conductive connection of hose connection and motor

| | part no. |
|---|---|
| 1 m long | 10-931 90 009 |

- **switching amplifier FSV 100**

| | | part no. |
|---|---|---|
| can be integrated into flow meter, 2 signals, with power supply cable, 5 m long | 230 V, 50 – 60 Hz, IP 44, 4A | 10-001 49 040 |
| connecting cable for magnetic valve | 5 m long | 10-934 08 036 |
| connecting cable for motor | 0,5 m long | 10-934 08 035 |

- **power supply cable** for FSV 100

| | part no. |
|---|---|
| 5 m long, without plug | 10-934 08 047 |

- **connecting cable** to motor for FSV 100

| | part no. |
|---|---|
| 0,5 m long, without coupling | 10-934 08 057 |

- **connecting cable** to FLUXTRONIC® FSV 100

| | part no. |
|---|---|
| 5 m long, 5 core, sleeve for strands on both ends | 10-934 08 030 |
| 10 m long, 5 core, sleeve for strands on both ends | 10-934 08 031 |

- **assembly output assignment FMC/FMO**

| | part no. |
|---|---|
| | 10-000 00 251 |

- **Platine with Hall-sensor for wear-free measurement, for FMO 104 - 150,** not suitable for use in hazardous areas

| | part no. |
|---|---|
| | 10-A06 04 919 |

## Switching amplifier with Ex input for use out of the hazardous areas

- **switching amplifier FSV 132**

| | | part no. |
|---|---|---|
| for installation in switch box | 2 signals,<br>230 V, 50 – 60 Hz,<br>IP 20, AC - 4A, DC - 2A<br>Ex-marking:<br>II (1) G [Ex ia Ga] IIC | 10-940 04 020 |
| 5-core control cable for the connection of flow meter or FAE | 5 m long | 10-934 08 038 |
| | 10 m long | 10-934 08 040 |
| | 15 m long | 10-934 08 041 |

- **switching amplifier FSV 133 Ex** (only for transferring impulse)

| | | part no. |
|---|---|---|
| for installation in switch box | 1 signal,<br>Ex i entry acc. to EN 60947-5-6, electronic exit 30 V DC/50 mA<br>Ex-marking: II 3 (1) G Ex nAc nCc [ia] IIC T4 | 10-940 04 043 |
| 5-core control cable for the connection of flow meter or FAE | 5 m long | 10-934 08 038 |
| | 10 m long | 10-934 08 040 |
| | 15 m long | 10-934 08 041 |

## Switching amplifier in Ex-version, Zone 1

- **switching amplifier FSV 121 Ex**

| | | part no. |
|---|---|---|
| for wall mounting with miniCLIX plug connections for network connection cable, with control cable 5 m long | 1 signal,<br>230 V, 50 Hz, 4 A, IP 66<br>Ex-marking: II 2 G db eb [ia Ga] IIC T6 Gb | 10-001 49 051 |
| power supply cable | 5 m long, with plug-in | 10-934 08 062 |
| connection cable to motor | 5 m long | 10-934 08 049 |

- **switching amplifier FSV 121-1/2 Ex**

| | | part no. |
|---|---|---|
| for wall mounting,<br>without plug-ins and control cable | 121-1: 1 signal<br>230 V, 50 Hz, 4A, IP 66,<br>Ex-marking: II 2(1) G Ex db eb [ia Ga] IIC T6 Gb | 10-001 49 039 |
| | 121-2, 2 signals<br>230 V, 50 Hz, 4A, IP 66,<br>Ex-marking: II 2(1) G Ex db eb [ia Ga] IIC T6 Gb | 10-001 49 063 |
| control cable for the connection of flow meter or FAE | 5 m long | 10-934 08 038 |
| | 10 m long | 10-934 08 040 |
| | 15 m long | 10-934 08 041 |

# For your notes

# Mixers
for assembly on IBC

# Mixer sets
## for assembly on IBC

### for viscosity up to 1.500 cP

circulation capacity approx. 2,6 m³/min. related to water

- **IBC mixer set EHM 0.55/6-Mo**
  **three-phase motor BG 80 0,55 kW,** protection class IP 55
  with 3 x 400 V, 50 Hz, motor protection switch and 5 m cable with plug
  **mixer shaft EHM BG80 PE i**n steel/PE coating
  **mixing blade DRK 175** in PP-GFV, diameter 175 mm / 3 blades
  **IBC cover with flange DN 150,** rotary shaft seal PTFE

| immersion length | part no. |
|---|---|
| 800 mm | 10-P00 00 001 |

### for viscosity up to 2.000 cP

circulation capacity approx. 2,6 m³/min. related to water

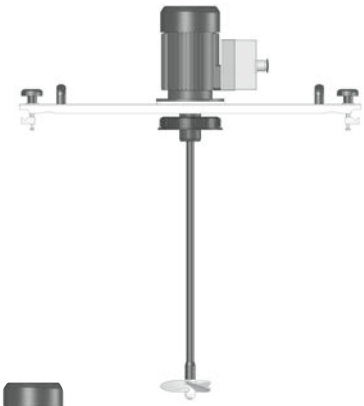

- **IBC mixer set EHM 0.75/6-RT**
  **three-phase motor BG90 0,75 kW,** efficiency class 3, protection class IP 55
  with 3 x 400 V, 50 Hz, motor protection switch and 5 m cable with plug
  **mixer shaft EHM BG80 PE i**n steel/PE coating
  **mixing blade DRK 175** in PP-GFVI, diameter 175 mm / 3 blades
  **IBC cover DN 150 with protection tube,** rotary shaft seal BG90 in PTFE
  **IBC traverse** RT 1000

| immersion length | part no. |
|---|---|
| 850 mm | 10-P00 00 003 |

### for viscosity up to 2.500 cP

circulation capacity approx. 3,8 m³/min. related to water

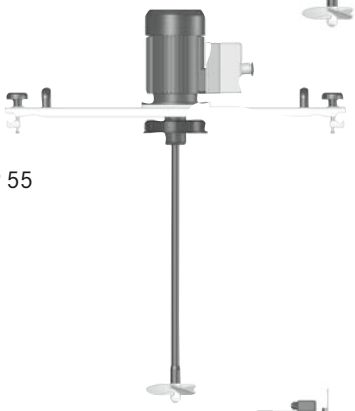

- **IBC mixer set EHM 1,1/6-RT**
  **three-phase motor BG 90 1,1 kW,** efficiency class 3, protection class IP 55
  with 3 x 400 V, 50 Hz, motor protection switch and 5 m cable with plug
  **mixer shaft EHM BG90 PE i**n steel/PE coating
  **mixing blade DRK 200** in PP-GFVI, diameter 200 mm / 3 blades
  **IBC cover DN 150 with protection tube,** rotary shaft seal BG90 in PTFE
  **IBC traverse** RT 1000

| immersion length | part no. |
|---|---|
| 850 mm | 10-P00 00 004 |

### for viscosity up to 6.000 cP

- **IBC mixer set ESM 0.75/133-RT**
  **three-phase motor BG90 0,75 kW,** efficiency class 3, protection class IP 55
  with 3 x 400 V, 50 Hz, motor protection switch and 5 m cable with plug
  **mixer shaft ESG63** in stainless steel
  **folding mixing blade KLR3** in stainless steel, diameter 400 mm / 3 blades
  **IBC cover with flange DN 150,** rotary shaft seal ESG63 in PTFE
  **IBC traverse** RT 1000

| immersion length | part no. |
|---|---|
| 900 mm | 10-P00 00 005 |

### for viscosity up to 12.000 cP

- **IBC mixer set ESM 1,5/70-RT**
  **three-phase motor BG90 1,5 kW,** efficiency class 3, protection class IP 55
  with 230 V / 380 - 400 V / 460 - 480 V, 50/60 Hz, motor protection switch and 5 m cable with plug
  **mixer shaft ESG63** in stainless steel
  2 **folding mixing blades KLR3** in stainless steel, diameter 400 mm / 3 blades
  **IBC cover with flange DN 150,** rotary shaft seal ESG63 in PTFE
  **IBC traverse** RT 1000

| immersion length | part no. |
|---|---|
| 850 mm | 10-P00 00 002 |

# Centrifugal immersion pumps
(600 and 700 series)

# Centrifugal immersion pumps

with mechanical seal

## Centrifugal immersion pumps F 620 in stainless steel, with mechanical seal, seal material FKM, with open conical rotor in polypropylene, discharge connection G 1½" male

- **F 620 S-15**

| nominal length | conical rotor Ø | part no. |
|---|---|---|
| 700 mm | 15 mm | 10-620 23 001 |
| 1.000 mm | 15 mm | 10-620 23 002 |
| 1.500 mm | 15 mm | 10-620 23 003 |
| additional cost for stainless steel conical rotor | | 10-620 24 030 |

- **F 620 S-30**

| nominal length | conical rotor Ø | part no. |
|---|---|---|
| 700 mm | 30 mm | 10-621 23 001 |
| 1.000 mm | 30 mm | 10-621 23 002 |
| 1.500 mm | 30 mm | 10-621 23 003 |
| additional cost for stainless steel conical rotor | | 10-621 24 005 |

Other lengths up to 3.000 mm available on request

- **mounting flange** in stainless steel
  mounting dimensions (bottom mounting flange to bottom pump) is reduced at least by 100 mm compared to the specified nominal

| | part no. |
|---|---|
| outer Ø 265 mm, PCD Ø 225 mm, 8 holes Ø 18 mm | 10-947 14 005 |

- **suction strainer**, in stainless steel for:

| | part no. |
|---|---|
| F 620 S-15, F 620 S-30 | 10-001 10 232 |

F 620 S-30
with suction strainer

## Centrifugal immersion pumps F 620 in stainless steel with mechanical seal, seal material FKM, closed impeller Ø 157 mm in stainless steel, discharge connection G 1½" male

- **F 620 S-157/3**

| nominal length | impeller height | part no. |
|---|---|---|
| 1.200 mm | 3 mm | 10-620 20 012 |

- **F 620 S-157/5**

| nominal length | impeller height | part no. |
|---|---|---|
| 1.200 mm | 5 mm | 10-620 20 112 |

Other lengths up to 3.000 mm and versions for AdBlue® * available on request

## Centrifugal immersion pump F 640 in polypropylene, with mechanical seal, seal material FKM, with open conical rotor or closed impeller in polypropylene, discharge connection G 2¼" male

- **F 640 PP-15 (with conical rotor)**

| nominal length | part no. |
|---|---|
| 700 mm | 10-640 41 407 |
| 1.000 mm | 10-640 41 410 |
| 1.500 mm | 10-640 41 415 |

- **F 640 PP-30 (with conical rotor)**

| nominal length | part no. |
|---|---|
| 700 mm | 10-640 41 607 |
| 1.000 mm | 10-640 41 610 |
| 1.500 mm | 10-640 41 615 |

- **F 640 PP-15 Z (with impeller for increased pumping head)**

| nominal length | part no. |
|---|---|
| 700 mm | 10-640 41 507 |
| 1.000 mm | 10-640 41 510 |
| 1.500 mm | 10-640 41 515 |

- **F 640 PP-30 Z (with impeller for increased pumping head)**

| nominal length | part no. |
|---|---|
| 700 mm | 10-640 41 707 |
| 1.000 mm | 10-640 41 710 |
| 1.500 mm | 10-640 41 715 |

Other lengths up to 4.000 mm available on request

* AdBlue® is a registered trademark of: Verband der Automobilindustrie e. V. (VDA)

F 640 PP-30
with suction strainer

- **mounting flange** in polypropylene
  mounting dimensions (bottom mounting flange to bottom pump) is reduced at least by 100 mm compared to the specified nominal

| | part no. |
|---|---|
| outer Ø 265 mm, LK Ø 225 mm, 8 holes Ø 18 mm | 10-947 14 001 |

- **suction strainer** in polypropylene for:

| | part no. |
|---|---|
| F 640 PP-15, F 640 PP-30, F 640 PP-15Z, F 640 PP-30Z A | 10-001 10 235 |

**Drive motors see page 78**

F 640 PP-185
with mounting flange

## Centrifugal immersion pump F 640 with mechanical seal, seal material FKM, discharge connection G 2¼" male, without mounting flange

- **F 640 PP-185** in polypropylene, with closed polypropylene impeller*

| nominal length | housing Ø | part no. |
|---|---|---|
| 700 mm | 185 mm | 10-640 41 207 |
| 1.000 mm | 185 mm | 10-640 41 210 |
| 1.500 mm | 185 mm | 10-640 41 215 |

- **F 640 PVDF-185** in polyvinylidene fluoride, with closed polyvinylidene fluoride impeller*

| nominal length | housing Ø | part no. |
|---|---|---|
| 700 mm | 185 mm | 10-640 61 207 |
| 1.000 mm | 185 mm | 10-640 61 210 |
| 1.500 mm | 185 mm | 10-640 61 215 |

- **F 640 PP-230** in polypropylene with closed polypropylene impeller*

| nominal length | housing Ø | part no. |
|---|---|---|
| 700 mm | 230 mm | 10-640 41 307 |
| 1.000 mm | 230 mm | 10-640 41 310 |
| 1.500 mm | 230 mm | 10-640 41 315 |

- **F 640 PVDF-230** in polyvinylidene fluoride with closed polyvinylidene fluoride impeller*

| nominal length | housing Ø | part no. |
|---|---|---|
| 700 mm | 230 mm | 10-640 61 307 |
| 1.000 mm | 230 mm | 10-640 61 310 |
| 1.500 mm | 230 mm | 10-640 61 315 |

* in order to achieve the desired output, centrifugal impellers in diameters of 100 to 140 mm (for housing Ø 185) and 130 to 160 mm (for housing Ø 230) are available

other lengths up to 4.100 mm and versions for AdBlue® ** available on request

## Accessories for centrifugal immersion pumps F 640

- **mounting flange polypropylene**
  mounting dimensions (bottom mounting flange to bottom pump) is reduced at least by 100 mm compared to the specified nominal

| | part no. |
|---|---|
| outer Ø 340 mm, PCD Ø 295 mm, 4 holes Ø 22 mm | 10-947 14 049 |
| outer Ø 445 mm, PCD Ø 400 mm, 6 holes Ø 22 mm | 10-947 14 084 |

- **mounting flange polyvinylidene fluoride**
  mounting dimensions (bottom mounting flange to bottom pump) is reduced at least by 100 mm compared to the specified nominal

| | part no. |
|---|---|
| outer Ø 340 mm, PCD Ø 295 mm, 4 holes Ø 22 mm | 10-947 14 070 |
| outer Ø 445 mm, PCD Ø 400 mm, 6 holes Ø 22 mm | 10-947 14 085 |

- **suction strainer** welded to the lid of the pump housing:

| pump | material | part no. |
|---|---|---|
| F 640 PP-185 | polypropylene | 10-001 10 311 |
| F 640 PVDF-185 | polyvinylidene fluoride | 10-001 10 312 |
| F 640 PP-230 | polypropylene | 10-001 10 301 |

** AdBlue® is a registered trademark of: Verband der Automobilindustrie e. V. (VDA)

# Centrifugal immersion pumps
and drive motors

## Centrifugal immersion pumps for dry installation, for horizontal or vertical use

with mechanical seal, with open conical rotor or closed centrifugal impeller, without base plate, inlet with thread connection or DN 65 flange, nominal pressure PN 10, outlet with thread connection or DN 50 flange, nominal pressure PN 10

| | inlet | outlet | part no. |
|---|---|---|---|
| F 640 PP-30 TR | G 2” male | G 2¼ male | 10-640 41 601 |
| F 640 PP-30 TR | flange | flange | 10-640 41 600 |
| F 620 S-30 TR | G 2” male | G 1½ male | 10-620 25 502 |

| | housing Ø | inlet | outlet | part no. |
|---|---|---|---|---|
| F 640 PP-230 TR | 230 mm* | flange | flange | 10-640 41 300 |

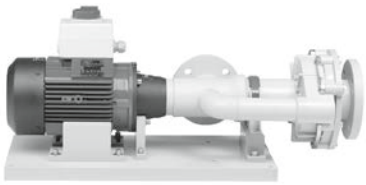

F 640 PP-230 TR
with base plate

*in order to achieve the desired output, centrifugal impellers in diameters of 100 to 160 mm are available

| | part no. |
|---|---|
| base plate (polypropylene) | 10-001 15 023 |

Drive motors see below

## Hose connections for centrifugal immersion pumps F 620 and F 640

- **stainless steel**, with union nut G 1½” female

| | part no. |
|---|---|
| DN 25 | 10-959 04 002 |
| DN 32 | 10-959 04 003 |
| DN 38 | 10-959 04 004 |

- **polypropylene**, with union nut G 2¼” female

| | part no. |
|---|---|
| DN 32 | 10-959 04 098 |
| DN 38 | 10-959 04 099 |
| DN 50 | 10-959 04 100 |

- **polyvinylidene fluoride**, with union nut G 2¼” female

| | part no. |
|---|---|
| DN 38 | 10-959 04 105 |
| DN 50 | 10-959 04 096 |

Hoses see drum pump accessories on page 31

## Drive motors for centrifugal immersion pumps F 620 and F 640

- **Three-phase motor,** 50 Hz, jet-proof to IP 55, **with motor protection switch**, IE3, 3.000 rpm

| | part no. |
|---|---|
| 0,75 kW, 230 / 400 V | 10-001 03 429 |
| 1,5 kW, 230 / 400 V | 10-001 03 433 |
| 2,2 kW, 230 / 400 V | 10-001 03 435 |
| 3,0 kW, 400 V | 10-001 03 437 |
| 4,0 kW, 400 V | 10-001 03 439 |

- **Three-phase motor,** 50 Hz, jet-proof to IP 55, **with cable terminal box**, IE3, 3.000 rpm

| | part no. |
|---|---|
| 0,75 kW, 230 / 400 V | 10-001 03 422 |
| 1,5 kW, 230 / 400 V | 10-001 03 432 |
| 2,2 kW, 230 / 400 V | 10-001 03 434 |
| 3,0 kW, 400 / 690 V | 10-001 03 436 |
| 4,0 kW, 400 / 690 V | 10-001 03 438 |
| 5,5 kW, 400 / 690 V (for 700 series only) | 10-001 03 440 |

## Accessories for three-phase motors

- **carrying handle** for motor flange Ø 160,
  mounting with 2 lugs for 3-phase motors up to size 90 and max. 20 kg

| | part no. |
|---|---|
| standard version | 10-001 10 531 |
| with mounting for Ex motor protection switch | 10-001 10 588 |

- **power supply cable**

| | part no. |
|---|---|
| pre-assembled with sleeve and Cekon plug, 5 m long | 10-934 08 020 |
| pre-assembled with sleeve without plug, 5 m long | 10-934 08 025 |
| per meter | 10-934 08 901 |
| electrical mounting three-phase motor | 10-Z05 00 DKS |

- **cekon-plug**

| | part no. |
|---|---|
| 5-poles | 10-937 01 014 |

- **motor protection switch**, protection category IP 65,
  with 2 cable inlet ports, for mounting onto the motor

| adjustment range | part no. |
|---|---|
| 1,30 – 2,00 A | 10-936 06 168 |
| 1,80 – 3,00 A | 10-936 06 169 |
| 2,80 – 4,60 A | 10-936 06 170 |
| 4,20 – 6,70 A | 10-936 06 171 |
| 6,50 - 10,00 A | 10-936 06 172 |
| 10,00 - 16,00 A | 10-936 06 173 |

# Centrifugal immersion pumps

sealless

**Sealless centrifugal immersion pumps F 706 / F 716 / F 726 for continuous use**
available in following materials:
polypropylene (PP): F 706 / F 716 / F 726
polyvinylidene fluoride (PVDF): F 716 / F 726

**Special features and benefits type F 716 and F 726:**

- each pump is determined to the required duty point
- for continuous use
- immersion lengths up to 1.000 mm. The immersion length of the pump can be extended up to 1.500 mm maximum by the suction tube option.
- F 716 / F 726 safe to run dry. With free-flying shaft for very low wear. There is no need for an additional bearing carrier.

**Drive motors:**

As drive motors three-phase motors are available from 0,37 to 5,5 kW, jet-proof to IP 55

# Air-operated diaphragm pumps
(RFM and FDM series)

# Air-operated diaphragm pumps

RFM in solid construction

### RFM 10 in polypropylene (PP) or polytetrafluoroethylene (PTFE), connection pump G ⅜” female

| | diaphragm/seal | part no. |
|---|---|---|
| RFM 10 PP/NN | NBR | 10-D10 40 010 |
| RFM 10 PP/TK | PTFE/FFKM | 10-D10 40 120 |
| RFM 10 PP/TE | PTFE/EPDM | 10-D10 40 130 |
| RFM 10 PP/TV | PTFE/FKM | 10-D10 40 140 |
| RFM 10 PP/EE | EPDM | 10-D10 40 210 |
| RFM 10 PP/VV | FKM | 10-D10 40 310 |
| RFM 10 PTFE/TK | PTFE/FFKM | 10-D10 00 120 |
| RFM 10 PTFE/TE | PTFE/EPDM | 10-D10 00 130 |
| RFM 10 PTFE/TV | PTFE/FKM | 10-D10 00 140 |
| RFM 10 PTFE/EE | EPDM | 10-D10 00 210 |
| RFM 10 PTFE/VV | FKM | 10-D10 00 310 |

### RFM 10 in polytetrafluoroethylene (PTFE), FDA CFR 21 conform, connection pump G ⅜” female

| | diaphragm/seal | part no. |
|---|---|---|
| RFM 10 PTFE/TK (FDA) | PTFE/FFKM | 10-D10 00 121 |
| RFM 10 PTFE/TE (FDA) | PTFE/EPDM | 10-D10 00 131 |

### RFML 10 electrically conductive PP or PTFE, for applications in Zone 1, Ex-marking II 1/2 G Ex h IIB T6.. T4 Ga/Gb, connection pump G ⅜” female

| | diaphragm/seal | part no. |
|---|---|---|
| RFML 10 PP/NN | NBR | 10-D10 41 010 |
| RFML 10 PP/TK | PTFE/FFKM | 10-D10 41 120 |
| RFML 10 PP/TE | PTFE/EPDM | 10-D10 41 130 |
| RFML 10 PP/TV | PTFE/FKM | 10-D10 41 140 |
| RFML 10 PP/EE | EPDM | 10-D10 41 210 |
| RFML 10 PP/VV | FKM | 10-D10 41 310 |
| RFML 10 PTFE/TK | PTFE/FFKM | 10-D10 01 120 |
| RFML 10 PTFE/TE | PTFE/EPDM | 10-D10 01 130 |
| RFML 10 PTFE/TV | PTFE/FKM | 10-D10 01 140 |
| RFML 10 PTFE/EE | EPDM | 10-D10 01 210 |
| RFML 10 PTFE/VV | FKM | 10-D10 01 310 |

### RFML 10 electrically conductive PTFE, FDA CFR 21 conform

| | diaphragm/seal | part no. |
|---|---|---|
| RFML 10 PTFE/TK-FDA | PTFE/FFKM | 10-D10 01 121 |
| RFML 10 PTFE/TE-FDA | PTFE/EPDM | 10-D10 01 131 |

### RFM 15 in polypropylene (PP) or polytetrafluoroethylene (PTFE), connection pump G ½” female

| | diaphragm/seal | part no. |
|---|---|---|
| RFM 15 PP/NN | NBR | 10-D15 40 010 |
| RFM 15 PP/TK | PTFE/FFKM | 10-D15 40 120 |
| RFM 15 PP/TE | PTFE/EPDM | 10-D15 40 130 |
| RFM 15 PP/TV | PTFE/FKM | 10-D15 40 140 |
| RFM 15 PP/EE | EPDM | 10-D15 40 210 |
| RFM 15 PP/VV | FKM | 10-D15 40 310 |
| RFM 15 PTFE/TK | PTFE/FFKM | 10-D15 00 120 |
| RFM 15 PTFE/TE | PTFE/EPDM | 10-D15 00 130 |
| RFM 15 PTFE/TV | PTFE/FKM | 10-D15 00 140 |
| RFM 15 PTFE/EE | EPDM | 10-D15 00 210 |
| RFM 15 PTFE/VV | FKM | 10-D15 00 310 |

### RFM 15 in polytetrafluoroethylene (PTFE), FDA CFR 21 conform, connection pump G ½” female

| | diaphragm/seal | part no. |
|---|---|---|
| RFM 15 PTFE/TK (FDA) | PTFE/FFKM | 10-D15 00 121 |
| RFM 15 PTFE/TE (FDA) | PTFE/EPDM | 10-D15 00 131 |

## RFML 15 electrically conductive PP or PTFE, for applications in Zone 1, Ex-marking II 1/2 G Ex h IIB T6..T4 Ga/Gb, connection pump G ½" female

| | diaphragm/seal | part no. |
|---|---|---|
| RFML 15 PP/NN | NBR | 10-D15 41 010 |
| RFML 15 PP/TK | PTFE/FFKM | 10-D15 41 120 |
| RFML 15 PP/TE | PTFE/EPDM | 10-D15 41 130 |
| RFML 15 PP/TV | PTFE/FKM | 10-D15 41 140 |
| RFML 15 PP/EE | EPDM | 10-D15 41 210 |
| RFML 15 PP/VV | FKM | 10-D15 41 310 |
| RFML 15 PTFE/TK | PTFE/FFKM | 10-D15 01 120 |
| RFML 15 PTFE/TE | PTFE/EPDM | 10-D15 01 130 |
| RFML 15 PTFE/TV | PTFE/FKM | 10-D15 01 140 |
| RFML 15 PTFE/EE | EPDM | 10-D15 01 210 |
| RFML 15 PTFE/VV | FKM | 10-D15 01 310 |

## RFM 25 in polypropylene (PP) or polytetrafluoroethylene (PTFE), connection pump G 1" female

| | diaphragm/seal | part no. |
|---|---|---|
| RFM 25 PP/NN | NBR | 10-D25 40 010 |
| RFM 25 PP/TK | PTFE/FFKM | 10-D25 40 120 |
| RFM 25 PP/TE | PTFE/EPDM | 10-D25 40 130 |
| RFM 25 PP/TV | PTFE/FKM | 10-D25 40 140 |
| RFM 25 PP/EE | EPDM | 10-D25 40 210 |
| RFM 25 PP/VV | FKM | 10-D25 40 310 |
| RFM 25 PTFE/TK | PTFE/FFKM | 10-D25 00 120 |
| RFM 25 PTFE/TE | PTFE/EPDM | 10-D25 00 130 |
| RFM 25 PTFE/TV | PTFE/FKM | 10-D25 00 140 |
| RFM 25 PTFE/EE | EPDM | 10-D25 00 210 |
| RFM 25 PTFE/VV | FKM | 10-D25 00 310 |

## RFM -F25 in polypropylene (PP) for abrasive fluids, connection pump G 1" female, flap valve PUR

| | diaphragm/seal | part no. |
|---|---|---|
| RFM-F 25 PP/N/PUR | NBR/PUR | 10-D25 40 510 |

## RFM 25 in polytetrafluoroethylene (PTFE) FDA CFR 21 conform, connection pump G 1" female

| | diaphragm/seal | part no. |
|---|---|---|
| RFM 25 PTFE/TK (FDA) | PTFE/FFKM | 10-D25 00 121 |
| RFM 25 PTFE/TE (FDA) | PTFE/EPDM | 10-D25 00 131 |

## RFML 25 electrically conductive PP or PTFE, for applications in Zone 1, Ex-marking II 1/2 G Ex h IIB T6..T4 Ga/Gb, connection pump G 1" female

| | diaphragm/seal | part no. |
|---|---|---|
| RFML 25 PP/NN | NBR | 10-D25 41 010 |
| RFML 25 PP/TK | PTFE/FFKM | 10-D25 41 120 |
| RFML 25 PP/TE | PTFE/EPDM | 10-D25 41 130 |
| RFML 25 PP/TV | PTFE/FKM | 10-D25 41 140 |
| RFML 25 PP/EE | EPDM | 10-D25 41 210 |
| RFML 25 PP/VV | FKM | 10-D25 41 310 |
| RFML 25 PTFE/TK | PTFE/FFKM | 10-D25 01 120 |
| RFML 25 PTFE/TE | PTFE/EPDM | 10-D25 01 130 |
| RFML 25 PTFE/TV | PTFE/FKM | 10-D25 01 140 |
| RFML 25 PTFE/EE | EPDM | 10-D25 01 210 |
| RFML 25 PTFE/VV | FKM | 10-D25 01 310 |

## RFML 25 electrically conductive PTFE, FDA CFR 21 conform

| | diaphragm/seal | part no. |
|---|---|---|
| RFML 25 PTFE/TK-FDA | PTFE/FFKM | 10-D25 01 121 |
| RFML 25 PTFE/TE-FDA | PTFE/EPDM | 10-D25 01 131 |

# Air-operated diaphragm pumps

RFM in solid construction

### RFM 40 in polypropylene (PP) or polytetrafluoroethylene (PTFE) connection pump G ½” female

| | diaphragm/seal | part no. |
|---|---|---|
| RFM 40 PP/NN | NBR | 10-D40 40 015 |
| RFM 40 PP/TE | PTFE/EPDM | 10-D40 40 135 |
| RFM 40 PP/TV | PTFE/FKM | 10-D40 40 145 |
| RFM 40 PP/EE | EPDM | 10-D40 40 215 |
| RFM 40 PP/VV | FKM | 10-D40 40 315 |

### RFM 40 in polypropylene (PP) for abrasive fluids, connection pump G 1 ½” female, flap valve PUR

| | diaphragm/seal | part no. |
|---|---|---|
| RFM 40 PP/N/PUR | NBR/PUR | 10-D40 40 510 |

### RFM 40, in polytetrafluoroethylene (PTFE), connection pump G 1 ½“ female

| | diaphragm/seal | part no. |
|---|---|---|
| RFM 40 PTFE/TK | PTFE/FFKM | 10-D40 00 125 |
| RFM 40 PTFE/TE | PTFE/EPDM | 10-D40 00 135 |
| RFM 40 PTFE/TV | PTFE/FKM | 10-D40 00 145 |
| RFM 40 PTFE/EE | EPDM/EPDM | 10-D40 00 215 |
| RFM 40 PTFE/VV | FKM/FKM | 10-D40 00 315 |

### RFM 40 in polytetrafluoroethylene (PTFE), FDA CFR 21 conform, connection pump G 1 ½“ female

| | diaphragm/seal | part no. |
|---|---|---|
| RFM 40 PTFE/TK (FDA) | PTFE/FFKM | 10-D40 00 121 |
| RFM 40 PTFE/TE (FDA) | PTFE/EPDM | 10-D40 00 131 |

FDA

## Reduction nipple to connect the hose connections to the pump for:

- **RFM 10**

| material | connection | part no. |
|---|---|---|
| PP | G 1” male – G ⅜” male | 10-959 06 159 |
| PVDF | G 1” male – G ⅜” male | 10-959 06 169 |

- **RFM 15**

| material | connection | part no. |
|---|---|---|
| PP | G 1” male – G ½” male | 10-959 06 160 |
| PVDF | G 1” male – G ½” male | 10-959 06 170 |

- **RFM 25**

| material | connection | part no. |
|---|---|---|
| PP | G 1¼” male – G 1” male | 10-959 06 161 |
| PVDF | G 1¼” male – G 1” male | 10-959 06 171 |

- **RFM 40**

| material | connection | part no. |
|---|---|---|
| PP | G 2” male – G 1½” male | 10-959 06 162 |

## Hose connections for connection to the pump (reduction nipple is necessary):

- **RFM 10/15**

| material | connection | part no. |
|---|---|---|
| PP | DN 13 – G 1” female | 10-959 04 073 |
| PVDF | DN 13 – G 1” female | 10-959 04 177 |
| PP | DN 19 – G 1” female | 10-959 04 074 |
| PVDF | DN 19 – G 1” female | 10-959 04 178 |

- **RFM 25**

| material | connection | part no. |
|---|---|---|
| PP | DN 25 – G 1¼” female | 10-959 04 052 |
| PVDF | DN 25 – G 1¼” female | 10-959 04 102 |
| PP | DN 32 – G 1¼” female | 10-959 04 054 |
| PVDF | DN 32 – G 1¼” female | 10-959 04 103 |

- **RFM 40**

| material | connection | part no. |
|---|---|---|
| PP | DN 32 – G 2” female | 10-959 04 010 |
| PVDF | DN 32 – G 2” female | 10-959 04 084 |
| PP | DN 38 – G 2” female | 10-959 04 011 |
| PVDF | DN 38 – G 2” female | 10-959 04 085 |
| PP | DN 50 – G 2” female | 10-959 04 012 |

## Suction tube for RFM 10, RFM 15 and RFM 25, polypropylene, with thread connector at the bottom G ½” male when outer-Ø 20 mm, G ¾” male when outer-Ø 25 mm

| | length | outer Ø | part no. |
|---|---|---|---|
| with hose nozzle DN 13 | 1.000 mm | 20 mm | 10-959 18 021 |
| with hose nozzle DN 25 | 700 mm | 25 mm | 10-959 18 008 |
| | 1.000 mm | 25 mm | 10-959 18 009 |
| with thread connector G 1” male | 700 mm | 25 mm | 10-959 18 010 |
| | 1.000 mm | 25 mm | 10-959 18 011 |
| with thread connector G 1¼” male | 1.000 mm | 25 mm | 10-959 18 013 |

## Suction strainer

- **for suction tube**

| material | connection | outer Ø | part no. |
|---|---|---|---|
| PP | G ½” female | 20 mm | 10-001 10 335 |
| PP | G ½” female | 25 mm | 10-001 10 324 |

- **for suction hose**

| material | with hose connector | part no. |
|---|---|---|
| PP | DN 19 | 10-001 10 330 |

# Accessories for air-operated diaphragm pumps

RFM/RFML

## Pressure regulator with filter unit and speed control valve, complete (pre-mounted) for:

- **RFM** (for use in non hazardous areas)

| | part no. |
|---|---|
| RFM 10 (¼") | 10-D01 00 410 |
| RFM 15/25 (¼") | 10-D01 00 412 |
| RFM 40 (½") | 10-D01 00 405 |
| filter cartridge (¼") for re-order | 10-001 10 115 |

- **RFML** (for use in hazardous areas)

| | part no. |
|---|---|
| RFML 10 | 10-D01 00 320 |
| RFML 15/25 | 10-D01 00 322 |

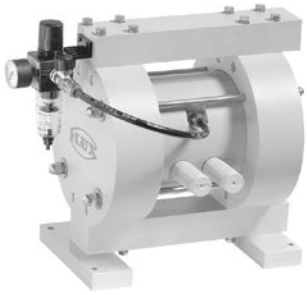

RFM 15 with pressure regulator

## Stroke counter complete with 5/2-way control valve for RFM

| | part no. |
|---|---|
| RFM 10/15 | 10-D01 00 101 |
| RFM 25 | 10-D01 00 102 |
| RFM 40 | 10-D01 00 103 |

- **impulse cable**

| | part no. |
|---|---|
| for use with digital display, 5 m long | 10-934 08 038 |

- **external digital display FLUXTRONIC®**

| | part no. |
|---|---|
| with mounting flange | 10-001 42 113 |

RFM 15 with stroke counter, impulse cable and external digital display FLUXTRONIC®

## Pulsation dampers, passive, max. operating pressure 8 bar:

| **for RFM 10 and RFM 15** | material | part no. |
|---|---|---|
| PDP 15 PP/N | NBR | 10-D01 15 400 |
| PDP 15 PP/E | EPDM | 10-D01 15 420 |
| PDP 15 PP/V | FKM | 10-D01 15 430 |
| connector female thread ¾" female | | |

| **for RFM 25** | material | part no. |
|---|---|---|
| PDP 25 PP/N | NBR | 10-D01 25 400 |
| PDP 25 PP/E | EPDM | 10-D01 25 420 |
| PDP 25 PP/V | FKM | 10-D01 25 430 |
| connector female thread 1" female | | |

| **for RFM 40** | material | part no. |
|---|---|---|
| PDP 40 PP/N | NBR | 10-D01 40 400 |
| PDP 40 PP/E | EPDM | 10-D01 40 420 |
| PDP 40 PP/V | FKM | 10-D01 40 430 |
| connector female thread 1" female | | |

- **filling connection** for filling pulsation damper

| material | connection | part no. |
|---|---|---|
| brass | G ¼" female - filling connection | 10-D01 00 000 |

# Air-operated diaphragm pumps

FDM/FDMH moulded pump design

## FDM 07, pump connection ¾“ NPTF male, G ¼“ female ¼“ NPTF female

| | | housing | diaphragm | part no. |
|---|---|---|---|---|
| FDM 07 PP/AA | | PP | santoprene | 10-M07 40 010 |
| FDM 07 PP/TT | | PP | PTFE | 10-M07 40 100 |
| FDM 07 AC/TT | Ex* | AC | PTFE | 10-M07 50 000 |

| | part no. |
|---|---|
| adapter plate for replacement FDM 06 by FDM 07 | 10-M07 70 100 |

FDM 07

## FDM 10, pump connection G ⅜” female

| | | housing | diaphragm | part no. |
|---|---|---|---|---|
| FDM 10 PP/AA | | PP | santoprene | 10-M10 40 010 |
| FDM 10 PP/TT | | PP | PTFE | 10-M10 40 110 |
| FDM 10 AC/TT | Ex* | AC | PTFE | 10-M10 50 110 |
| FDM 10 PVDF/TT | | PVDF | PTFE | 10-M10 60 110 |

FDM 10

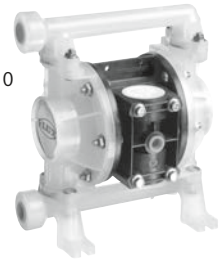

## FDM 12, pump connection ½” NPT

| | | housing | diaphragm | part no. |
|---|---|---|---|---|
| FDM 12 PP/AA | | PP | santoprene | 10-M12 40 210 |
| FDM 12 PP/TT | | PP | PTFE | 10-M12 40 110 |
| FDM 12 AC/TS | Ex* | AC | PTFE | 10-M12 50 010 |
| FDM 12 PVDF/TT | | PVDF | PTFE | 10-M12 60 010 |
| FDM 12 AL/TT | Ex* | AL | PTFE | 10-M12 10 100 |
| FDM 12 AL/NN | Ex* | AL | NBR | 10-M12 10 200 |
| FDM 12 S/TT | Ex* | S | PTFE | 10-M12 20 000 |

FDM 12

## FDM 25, pump connection flange 1” (hose connection see page 90)

| | | housing | diaphragm | part no. |
|---|---|---|---|---|
| FDM 25 PP/AA | | PP | santoprene | 10-M25 40 010 |
| FDM 25 PP/TT | | PP | PTFE | 10-M25 40 100 |
| FDM 25 PVDF/TT | | PVDF | PTFE | 10-M25 60 000 |

## FDM 25, pump connection G 1” female

| | | housing | diaphragm | part no. |
|---|---|---|---|---|
| FDM 25 AL/NN | Ex* | AL | NBR | 10-M25 10 000 |
| FDM 25 AL/TT | Ex* | AL | PTFE | 10-M25 10 100 |
| FDM 25 S/TT | Ex* | S | PTFE | 10-M25 20 100 |

FDM 25

## FDM 40, pump connection flange 1½” (hose connection see page 90)

| | | housing | diaphragm | part no. |
|---|---|---|---|---|
| FDM 40 PP/AA | | PP | santoprene | 10-M40 40 010 |
| FDM 40 PP/TT | | PP | PTFE | 10-M40 40 100 |
| FDM 40 PVDF/TT | | PVDF | PTFE | 10-M40 60 000 |

## FDM 40, pump connection G 1½” female

| | | housing | diaphragm | part no. |
|---|---|---|---|---|
| FDM 40 AL/NN | Ex* | AL | NBR | 10-M40 10 000 |
| FDM 40 AL/TT | Ex* | AL | PTFE | 10-M40 10 100 |
| FDM 40 S/TT | Ex* | S | PTFE | 10-M40 20 100 |
| FDM 40 GG/NN | Ex* | GG | NBR | 10-M40 30 000 |

FDM 40

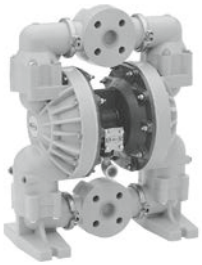

* for use in Zone 1, explosion-proof II 2 G D X

# Air-operated diaphragm pumps

FDM/FDMH moulded pump design

### FDM 50, pump connection flange 2” (hose connection see page 90)

| | | housing | diaphragm | part no. |
|---|---|---|---|---|
| FDM 50 PP/AA | | PP | santoprene | 10-M50 40 010 |
| FDM 50 PP/TT | | PP | PTFE | 10-M50 40 100 |
| FDM 50 PVDF/TT | | PVDF | PTFE | 10-M50 60 000 |

FDM 50

### FDM 50, pump connection G 2” female

| | | housing | diaphragm | part no. |
|---|---|---|---|---|
| FDM 50 AL/NN | Ex* | AL | NBR | 10-M50 10 200 |
| FDM 50 AL/TT | Ex* | AL | PTFE | 10-M50 10 300 |
| FDM 50 S/TT | Ex* | S | PTFE | 10-M50 20 300 |
| FDM 50 GG/NN | Ex* | GG | NBR | 10-M50 30 200 |
| FDM 50 GG/TT | Ex* | GG | PTFE | 10-M50 30 300 |

FDM 80

### FDM 80, pump connection G 3” female

| | | housing | diaphragm | part no. |
|---|---|---|---|---|
| FDM 80 AL/NN | Ex* | AL | NBR | 10-M80 10 000 |
| FDM 80 AL/TT | Ex* | AL | PTFE | 10-M80 10 100 |
| FDM 80 S/TT | Ex* | S | PTFE | 10-M80 20 100 |
| FDM 80 GG/TT | Ex* | GG | PTFE | 10-M80 30 100 |

FDMH 25

### FDMH 25, pump connection G 1” female

| | | housing | diaphragm | part no. |
|---|---|---|---|---|
| FDMH 25 S/TS | Ex* | S | PTFE | 10-M25 20 200 |

* for use in Zone 1, explosion-proof II 2 G D X

### Hose nipples for:

- **FDM 07**

| material | connection | part no. |
|---|---|---|
| MS | DN 10 - G ¼ male | 10-959 05 022 |
| PP | DN 10 - G ¼ male | 10-959 13 128 |
| PVC | DN 12 - G ¼ male | 10-959 05 181 |

- **FDM 10**

| material | connection | part no. |
|---|---|---|
| PVC | DN 15 – G ⅜” male | 10-959 05 232 |
| MS | DN 13 – G ⅜” male | 10-959 05 231 |

- **FDM 12**

| material | connection | part no. |
|---|---|---|
| PP | DN 13 – G ½” male | 10-959 05 183 |
| MS | DN 13 – G ½” male | 10-959 05 017 |
| MS | DN 19 – ½” NPT | 10-959 05 247 |
| S 316 Ti | DN 13 – ½” NPT | 10-959 05 249 |
| MS | DN 13 – ½” NPT | 10-959 05 258 |

- **FDM 25**

| material | connection | part no. |
|---|---|---|
| PP | DN 25 – G 1” male | 10-959 05 192 |
| MS | DN 19 – G 1” male | 10-959 05 161 |
| MS | DN 25 – G 1” male | 10-959 05 052 |
| S 316 Ti | DN 25 – G 1” male | 10-959 05 190 |

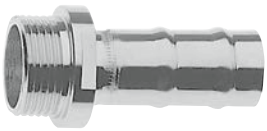

- **FDM 40**

| material | connection | part no. |
|---|---|---|
| MS | DN 38 – G 1½” male | 10-959 05 185 |
| MS | DN 32 – G 1½” male | 10-959 05 186 |
| S 316 Ti | DN 38 – G 1½” male | 10-959 05 188 |

- **FDM 50**

| material | connection | part no. |
|---|---|---|
| MS | DN 38 – G 2” male | 10-959 05 194 |

## Reduction nipples to connect the hose connections to the pump:

- **FDM 07**

| material | connection | part no. |
|---|---|---|
| MS | G ¼ male - G ½ male | 10-959 06 091 |
| MS | internal thread ¾ - 14 NPTi<br>internal thread ½ - 14 NPTi | 10-959 06 229 |

- **FDM 10**

| material | connection | part no. |
|---|---|---|
| PP | G 1” male – G ⅜” male | 10-959 06 159 |
| PVDF | G 1” male – G ⅜” male | 10-959 06 169 |

- **FDM 12**

| material | connection | part no. |
|---|---|---|
| PP | ½ NPT – G 1¼” male | 10-959 06 078 |
| PVDF | ½ NPT – G 1¼” male | 10-959 06 077 |
| stainless steel 316 Ti | ½ NPT – G 1¼” male | 10-959 06 079 |

- **FDM 25**

| | material | connection | part no. |
|---|---|---|---|
| reduction nipple short | MS | G 1” male – G 1¼” male | 10-959 06 080 |
| | S 316 Ti | G 1” male – G 1¼” male | 10-959 06 081 |
| reduction nipple long | MS | G 1” male – G 1¼” male | 10-959 06 082 |
| | S 316 Ti | G 1” male – G 1¼” male | 10-959 06 083 |

## Hose connections for connection to the pump:

- **FDM 07**

| material | connection | part no. |
|---|---|---|
| S 316 Ti* | DN 13 - G ¾ female | 10-959 04 133 |
| S 316 Ti* | DN 19 - G ¾ female | 10-959 04 147 |
| PP | ¾ - 14 A NPT | 10-959 13 381 |

- **FDM 10**

| material | connection | part no. |
|---|---|---|
| PP | DN 13 – G 1” female | 10-959 04 073 |
| PP | DN 19 – G 1” female | 10-959 04 074 |
| PVDF | DN 13 – G 1” female | 10-959 04 177 |
| PVDF | DN 19 – G 1” female | 10-959 04 178 |

* reduction nipple is necessary

## Connection pieces for connection to the pump:

- **FDM 12**

| material | connection | part no. |
|---|---|---|
| MS | G ½” female – ½” NPT A male | 10-959 06 112 |
| S | G ½” A male – ½” NPT A male | 10-959 06 119 |

## Double nipples for:

- **FDM 40**

| material | connection | part no. |
|---|---|---|
| MS | G ½” male – G 1½” male | 10-001 18 051 |
| S 1.4436 | G ½” male – G 1½” male | 10-001 18 047 |

- **FDM 50**

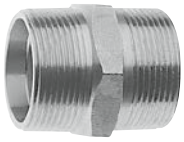

| material | connection | part no. |
|---|---|---|
| MS | G 2” male - G 2” male | 10-959 06 098 |
| S 1.4436 | G 2” male - G 2” male | 10-959 06 099 |

## Hoses for:

**DN 9, outer Ø 12 mm**

- **FDM 07**

| material | pressure | part no. |
|---|---|---|
| PE | max. 9 bar at 23°C | 10-001 10 889 |

# Accessories for air-operated diaphragm pumps

FDM

## Hose connections for:

- **FDM 12 and FDM 25**

| material | connection | part no. |
|---|---|---|
| PP | DN 13 – G 1¼” female | 10-959 04 081 |
| PP | DN 19 – G 1¼” female | 10-959 04 053 |
| PP | DN 25 – G 1¼” female | 10-959 04 052 |
| PP | DN 32 – G 1¼” female | 10-959 04 054 |
| PVDF | DN 13 – G 1¼” female | 10-959 04 082 |
| PVDF | DN 19 – G 1¼” female | 10-959 04 101 |
| PVDF | DN 25 – G 1¼” female | 10-959 04 102 |
| PVDF | DN 32 – G 1¼” female | 10-959 04 103 |
| AL | DN 25 – G 1¼” female | 10-959 04 119 |
| AL | DN 32 – G 1¼” female | 10-959 04 120 |
| stainless steel 316 Ti | DN 19 – G 1¼” female | 10-959 04 116 |
| stainless steel 316 Ti | DN 32 – G 1¼” female | 10-959 04 118 |

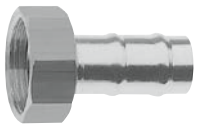

- **FDM 40**

| material | connection | part no. |
|---|---|---|
| stainless steel 316 Ti | DN 25 – G 1½” female | 10-959 04 002 |
| stainless steel 316 Ti | DN 32 – G 1½” female | 10-959 04 003 |
| stainless steel 316 Ti | DN 38 – G 1½” female | 10-959 04 004 |

- **FDM 50**

| material | connection | part no. |
|---|---|---|
| PP | DN 32 – G 2” female | 10-959 04 010 |
| PP | DN 38 – G 2” female | 10-959 04 011 |
| PP | DN 50 – G 2” female | 10-959 04 012 |
| PVDF | DN 32 – G 2” female | 10-959 04 084 |
| PVDF | DN 38 – G 2” female | 10-959 04 085 |
| stainless steel 316 Ti | DN 32 – G 2” female | 10-959 04 059 |
| stainless steel 316 Ti | DN 50 – G 2” female | 10-959 04 009 |

## Pulsation dampers for FDM 25, active

| | housing | diaphragm | part no. |
|---|---|---|---|
| PD 25 S/PTFE | S | PTFE | 10-M00 22 500 |

## Flanges complete with flat seal FKM and stainless steel screws (per pump two pieces are needed) for:

- **FDM 25**

| material | connection | part no. |
|---|---|---|
| PP | G 1¼” male | 10-947 14 059 |
| PVDF | G 1¼ ”male | 10-947 14 060 |

- **FDM 40**

| material | connection | part no. |
|---|---|---|
| PP | G 2” male | 10-947 14 061 |
| PVDF | G 2” male | 10-947 14 062 |

- **FDM 50**

| material | connection | part no. |
|---|---|---|
| PP | G 2” male | 10-947 14 063 |

## Hose connections for:

- **FDM 12**

| material | connection | outer Ø | part no. |
|---|---|---|---|
| MS | DN 13 – G ½” female | 21 mm | 10-959 13 179 |
| MS | DN 13 – G ½” female | 22 mm | 10-959 13 177 |
| S | DN 13 – ½” male NPT | 22 mm | 10-959 13 187 |

Brass and stainless steel hose connectors for hoses with DN 19, DN 25 and DN 32
see accessories for drum pumps on page 28

## Suction tubes with 90° bend

- **stainless steel 316 Ti**, with thread connector below G ¾” female

| version | length | outer Ø | part no. |
|---|---|---|---|
| with thread connection G 1 male | 1.000 mm | 28 mm | 10-959 18 026 |
| | 1.200 mm | 28 mm | 10-959 18 027 |
| with thread connection G 1¼ male | 1.000 mm | 28 mm | 10-959 18 032 |
| | 1.200 mm | 28 mm | 10-959 18 033 |

- **stainless steel 316 Ti**, without thread connector on below

| version | length | outer Ø | part no. |
|---|---|---|---|
| with thread connection G 1½ male | 1.000 mm | 41 mm | 10-959 18 034 |
| | 1.200 mm | 41 mm | 10-959 18 035 |

## Suction tubes FDM 10, FDM 12 and FDM 25

- **stainless steel 316 Ti**, thread connector below G ⅜” female at Ø 18 mm, G ¾” female at Ø 28 mm

| version | length | outer Ø | part no. |
|---|---|---|---|
| with thread connection G ½” male | 1.000 mm | 18 mm | 10-959 18 017 |
| with hose nozzle DN 25 | 1.000 mm | 28 mm | 10-959 18 001 |
| with thread connection G 1” male | 1.000 mm | 28 mm | 10-959 18 003 |
| | 1.200 mm | 28 mm | 10-959 18 030 |
| with thread connection G ¼” male | 700 mm | 28 mm | 10-959 18 004 |
| | 1.000 mm | 28 mm | 10-959 18 005 |

- **polypropylene**, thread connector below G ½” male at Ø 20 mm, G ¾” male at Ø 25 mm

| version | length | outer Ø | part no. |
|---|---|---|---|
| with hose nozzle DN 13 | 1.000 mm | 20 mm | 10-959 18 021 |
| with hose nozzle DN 25 | 700 mm | 25 mm | 10-959 18 008 |
| | 1.000 mm | 25 mm | 10-959 18 009 |
| with thread connection G 1” male | 700 mm | 25 mm | 10-959 18 010 |
| | 1.000 mm | 25 mm | 10-959 18 011 |
| with thread connection G 1¼” male | 1.000 mm | 25 mm | 10-959 18 013 |

## Suction strainer

- **suction strainer** for suction tube

| material | connection | outer Ø suction tube | part no. |
|---|---|---|---|
| stainless steel AISI 304 | G ¾ A, in plastic | 28 mm | 10-001 10 325 |
| stainless steel AISI 304 | G ⅜ A, in plastic | 18 mm | 10-001 10 334 |
| stainless steel, ex-proof | G ¾ A, in stainless steel | 28 mm | 10-001 10 357 |
| stainless steel, ex-proof | G ⅜ A, in stainless steel | 18 mm | 10-001 10 358 |
| PP with flowback stop valve | G ½ | 20 mm | 10-001 10 335 |
| PP with flowback stop valve | G ¾ | 25 mm | 10-001 10 324 |

- **for suction hose**

| material | with hose connector | part no. |
|---|---|---|
| PP | DN 19 | 10-001 10 330 |

- **earth wire** with crocodile clip

| | cable cross-section | length | forceps | part no. |
|---|---|---|---|---|
| spiral cable (yellow) | 3 mm² | 4 m | stainless steel | 10-931 90 023 |
| cable (green/yellow) | 4 mm² | 2 m | steel zinc-plated | 10-931 90 015 |

**Hoses and hose clips see accessories for drum pumps on page 31-32**

# Accessories for air-operated diaphragm pumps

## Further accessories for FDM

- **pressure regulator** for:

| | connection | part no. |
|---|---|---|
| FDM 10 / 12 / 15 / 25 | G ¼" female | 10-001 10 101 |
| FDM 40 / 50 / 80 | G ½" female | 10-001 10 102 |

- **filter-regulator-lubricator unit** for:

| | connection | part no. |
|---|---|---|
| FDM 07 - FDM 25 | G ¼" female | 10-001 10 111 |
| FDM 07 - FDM 25, explosion-proof | G ¼" female | 10-001 10 114 |
| FDM 40 / 50 / 80 | G ½" female | 10-001 10 110 |
| FDM 40 - FDM 80, explosion-proof | G ½" female | 10-001 10 117 |

- **double nipple** for the connection between filter-regulator and speed regulating valve for:

| | connection | part no. |
|---|---|---|
| FDM 07 - FDM 25 | G ¼ A - G ¼ male | 10-959 06 166 |
| FDM 40 - FDM 80 | G ½ A - G ½ male | 10-959 06 167 |

- **speed regulation valve** for:

| | connection | part no. |
|---|---|---|
| FDM 07 - FDM 25 | G ¼" female | 10-D01 00 230 |
| FDM 40 - FDM 80 | G ½" female | 10-D01 00 231 |

- **air connection** in brass (double nipple fixing) for:

| | version | connection | part no. |
|---|---|---|---|
| FDM 10 / 12 / 25 | straight | ¼" NPT - G ¼" male | 10-959 06 088 |
| FDM 40, FDM 50 PP/PVDF | straight | ½" NPT - G ½" male | 10-959 06 086 |
| FDM 50 AL/S/GG, FDM 80 AL/S/GG | with 90° bend | ¾" NPT - G ½" male | 10-959 06 138 |

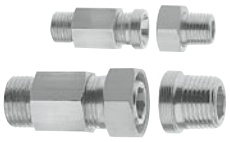

## Further accessories for FDM and RFM

- **compressed-air hose**

| nominal Ø, material | outer Ø | part no. |
|---|---|---|
| DN 10, EPDM, electrically conductive | 17.5 mm | 10-001 10 913 |
| DN 10, PVC | 17 mm | 10-001 10 071 |
| DN 13, PVC | 20 mm | 10-001 10 008 |

- **coupling** in brass

| nominal Ø | part no. |
|---|---|
| DN 7,2 – G ¼" male | 10-959 13 210 |

- **hose couplings** complete
  consisting of threaded nipple and hose coupling

| nominal Ø, material | part no. |
|---|---|
| DN 10 - G ¼" male, brass | 10-959 13 108 |
| DN 13 - G ½" male, steel nickel-plated | 10-959 13 109 |

- **plug-in sleeve** in brass for hose coupling

| nominal Ø | part no. |
|---|---|
| DN 10 | 10-959 13 209 |

- **hose nozzle** (brass)

| nominal Ø | part no. |
|---|---|
| DN 10 – G ¼" male | 10-959 05 022 |
| DN 13 – G ½" male | 10-959 05 017 |

- **1-ear hose clip**

| clamping range | part no. |
|---|---|
| 14,8 - 18,0 mm | 10-959 13 237 |
| 18,8 - 22,0 mm | 10-959 13 239 |

# Certificates

| | part no. |
|---|---|
| individual certificate FOOD | 10-Z01 00 400 |
| individual certificate FDA | 10-Z01 00 401 |
| test certificate acc. to DIN EN 10204-2.2 | 10-954 60 577 |
| inspection certificate for drum pump with commutator motor | 10-954 60 526 |
| inspection certificate for commutator motor | 10-954 60 582 |
| acceptance test certificate for progressive cavity pump with commutator motor | 10-954 60 529 |
| acceptance test certificate for progressive cavity pump with three-phase motor | 10-954 60 528 |
| acceptance test certificate for centrifugal immersion pump with three-phase motor | 10-954 60 527 |
| calibration report FMC | 10-954 60 768 |
| calibration report FMO | 10-954 60 750 |
| certificate of origin | 10-Z01 00 0K3 |

# General terms and conditions

## General terms and conditions of sale of FLUX-GERÄTE GMBH

### § 1 General, scope

(1) All supplies and services FLUX-GERÄTE GMBH are made exclusively at the following delivery and payment conditions (hereinafter also referred to as "terms of sale"). Terms and conditions of the customer that contradict or diverge from our terms of sale are herewith expressly excluded. FLUX-GERÄTE GMBH is only bound by such terms and conditions if FLUX-GERÄTE GMBH has acknowledged them in writing. Our terms of sale still apply even if we carry out the delivery to the customer without any reservation in the knowledge that the terms and conditions of the customer contradict or diverge from our terms of sale.

(2) In placing the order and accepting the goods delivered by us, the customer confirms its agreement with our terms and conditions. The storage and processing of the data of our customers is computerized to the extent that this is necessary for the due processing of the business relationship.

(3) All arrangements made between the customer and ourselves for the purpose of executing an agreement are set forth in said agreement.

(4) Our terms of sale only apply to companies as defined by Article 310 (1) BGB [Bürgerliches Gesetzbuch: German Civil Code].

**§ 2 Offers and deliveries**

(1) Our offers are generally valid for a limited period of time. If the order of the customer qualifies as an offer in accordance with Article 145 BGB, we can accept it within two weeks. The order is accepted by the order confirmation of FLUX-GERÄTE GMBH which forms the basis of the contractual agreement and determines the scope of the delivery.

(2) In the case of offers which are limited in time and which allow a certain period of time for acceptance, the offer is decisive if no order confirmation is issued within the period allowed. Side agreements and amendments must be confirmed by us in writing.

(3) We reserve the right to make design changes and other changes to technical data and specifications to the extent that these represent technical improvements and are deemed to be reasonably acceptable for the customer.

(4) Documents such as drawings, samples and the like provided to FLUX-GERÄTE GMBH as attachments to the request for an offer or the order remain the property of the customer. They form the binding basis for the preparation and elaboration of the offer by FLUX-GERÄTE GMBH. When placing orders, the customer must make written reference to any subsequent changes compared to the initial request for an offer and the offer by FLUX-GERÄTE GMBH. If FLUX-GERÄTE GMBH attaches similar documents to its offers in the way described above, these are and remain the property of FLUX-GERÄTE GMBH. The customer agrees not to use these documents for purposes not governed by the agreement, to duplicate them or to otherwise make them accessible to third parties. Obvious errors, printing, arithmetical, typing and calculation errors are not binding for FLUX-GERÄTE GMBH and do not entitle the customer to claim damages or compensation.

**§ 3 Prices and payment**

(1) Unless otherwise agreed in the order confirmation, the prices are ex works "Maulbronn", excluding costs of shipping and packaging; these will be invoiced separately.

(2) The delivery is made at the price stated in the offer of FLUX-GERÄTE GMBH or in the order confirmation in accordance with § 2 above.

(3) The invoice amount is due within 14 days of the invoice date with 2 % discount, or net within 30 days. Invoices for repairs are due immediately for payment, without deductions. The 2 % discount is not granted if other receivables are overdue. If payment periods are exceeded, we reserve the right to claim damages for delayed payment of 8 % above the base interest rate. For orders for goods with a net value of less than EUR 40 we charge a minimum quantity surcharge up to this net value.

(4) Payments can only be withheld or offset against any counterclaims if the counterclaims of the customer are undisputed, acknowledged and legally enforceable.

**§ 4 Delivery period, delivery not possible, delays**

(1) The delivery period begins as of the date of the order confirmation. However, this only applies if all the technical details have been clarified at this point in time.

(2) Compliance with our delivery obligation also presupposes that the customer satisfies its obligations punctually and properly. We reserve the right to make a plea of non-performance.

The delivery period is as agreed between the contractual parties. For FLUX-GERÄTE GMBH to keep the delivery date, all commercial and technical questions must have been clarified between the contractual parties and the customer must have fulfilled all its responsibilities, e.g. such as providing the necessary official certifications or permits or payment of a down-payment. If this is not the case, the delivery period is prolonged accordingly. This does not apply if FLUX-GERÄTE GMBH is responsible for the delay.

(3) Keeping the delivery period is also subject to the condition that FLUX-GERÄTE GMBH receives its own deliveries on time. FLUX-GERÄTE GMBH will immediately announce any indication of possible delays.

(4) The delivery period is deemed to have been kept if the item being delivered has left the plant of FLUX-GERÄTE GMBH in Maulbronn before the end of the delivery period or the customer has been notified that the item is ready for shipment. If the products have to be inspected and accepted, the inspection date is decisive, unless there are reasonable grounds to reject acceptance; alternatively, notification that the products are ready for inspection is deemed to be decisive.

(5) If the shipment or inspection of the products being delivered is delayed for reasons caused by the customer, the costs caused by the delay will be charged to the customer starting one month after notification that the products are ready for shipment or inspection.

(6) If the failure to keep the delivery period is due to force majeure, labor disputes or other events which are beyond the control of FLUX-GERÄTE GMBH, the delivery period is extended accordingly. FLUX-GERÄTE GMBH will inform the customer about the beginning and end of such events as soon as reasonably possible.

(7) The customer can withdraw from the contract without notice if circumstances render performance impossible for FLUX-GERÄTE GMBH before the transfer of risk. The customer can also withdraw from the contract if execution of part of a delivery is impossible and the customer has a legitimate interest in rejecting partial delivery. If this is not the case, the customer must pay that part of the contractually agreed price that relates to the partial delivery. The same applies if FLUX-GERÄTE GMBH is unable to execute the contract. §§ 7-9 apply by analogy.

(8) If the customer is in default of acceptance or if it violates any other duty to cooperate, we are entitled to claim compensation for any loss that we have sustained as a result, including any additional expenses that have been incurred. Further claims and rights are reserved.

(9) Provided the prerequisites of (4) are in place, the risk of accidental loss or the accidental deterioration of the purchased goods is transferred to the customer at the point in time when the customer is in default of acceptance or payment.

(10) We are liable in accordance with the legal provisions to the extent that the underlying purchase agreement contains a fixed date of delivery in accordance with Article 286 (2) No. 4 BGB or Section 376 HGB [Handelsgesetzbuch: German Commercial Code]. We are also liable in accordance with the legal provisions if the customer is entitled on account of a delay in delivery for which we are responsible to claim that its interest in executing the contract has lapsed.

(11) We are also liable in accordance with the legal provisions if the delay in delivery is due to the willful or gross negligent breach of contract by us; if our representatives or agents are responsible, the liability lies with us. If the delay in delivery is due to a gross negligent breach of contract by us, our liability for damages is limited to foreseeable losses that typically occur in such cases.

(12) We are also liable in accordance with the legal provisions if the delay in delivery for which we are responsible is due to the culpable infringement of a significant contractual duty; in this case, our liability for damages is limited to foreseeable losses that typically occur.

(13) In the case of a delay in delivery, we are liable for every full week of delay in the form of a lump-sum compensation for delay equivalent to 0.5 % of the value of the goods being delivered per week, but not more than 10% of the total value of the goods being delivered. If FLUX-GERÄTE GMBH is in default with the delivery, the customer is entitled to grant FLUX-GERÄTE GMBH by written declaration an additional period for delivery of at least another four weeks, beginning from the receipt of the written declaration. If this additional term expires without success, the customer is entitled to withdraw from the contract.

(14) This does not affect other legal claims and rights of the customer.

**§ 5 Transfer of risk**

(1) The risk is transferred to the customer when the goods being delivered leave the plant, even if part deliveries have been made or FLUX-GERÄTE GMBH has agreed to provide other services, e.g. shipping costs or delivery and installation. Where an inspection is necessary, this is decisive for the transfer of risk. It must be carried out immediately as of the inspection date, alternatively after FLUX-GERÄTE GMBH notifies the customer that the goods are ready for inspection. The customer may only refuse to accept the goods after inspection if there is a significant defect.

(2) If shipment or inspection is delayed or does not take place due to circumstances that are beyond the control of FLUX-GERÄTE GMBH, the risk is transferred to the customer from the day on which the customer is notified that the goods are ready for shipping or inspection. FLUX-GERÄTE GMBH agrees at the expense of the customer to take out any insurance the customer may demand.

(3) Partial deliveries are permissible to the extent that the deliveries can be split and partial deliveries are deemed to be reasonably acceptable for the customer.

(4) At the customer's request, we will take out transport insurance to cover the delivery; any costs incurred for this are borne by the customer.

**§ 6 Retention of title**

(1) The delivered goods remain our property until all current and future receivables from the business relationship with the customer have been paid, regardless of the legal grounds.

If the customer contravenes the contractual arrangements, including but not limited to default of payment, we are entitled to take back the goods that have been delivered. An application for the opening of insolvency protection proceedings entitles FLUX-GERÄTE GMBH to withdraw from the contract and to demand that the delivered goods be returned immediately. The repossession of the purchased goods by FLUX-GERÄTE GMBH constitutes a withdrawal from the contract. After repossessing the purchased goods, FLUX-GERÄTE GMBH is authorized to sell the goods, the proceeds of which are to be offset against the liabilities of customer, less reasonable selling costs.

(2) In the event of attachments or other interventions of third parties, the customer must inform us immediately in writing so that we can institute proceedings in accordance with Section 771 ZPO (Zivilprozessordnung: German Code of Civil Procedure). If the third party is not able to reimburse the costs of litigation incurred in and out of court, the customer is liable for any losses we may incur.

(3) The customer is authorized to resell the delivered goods in the course of ordinary business, but on a revocable basis. The customer assigns to us all receivables up to the final invoice amount (including value added tax) of our receivable which are due to the customer from the resale from its customers or third parties, regardless of whether the purchased item is resold without or after processing. The assigned receivables act as security for all claims in accordance with paragraph 1 above. At our request, the customer is obliged to inform us of the assignment to third parties for the purpose of payment to us and to provide us with the necessary information and documents that we need to enforce our rights.

(4) The customer may neither sell the delivered goods, pledge them nor offer them as collateral. In the event of attachments or confiscation or other orders by third parties, the customer must inform FLUX-GERÄTE GMBH immediately.

**§ 7 Warranty claims**

(1) The warranty claims of the customer require that its statutory obligations in accordance with Section 377 HGB to examine the goods and to give notice of defects have been duly fulfilled.

(2) If the purchased item exhibits a defect, the customer is entitled to supplementary performance and can choose between remedying the defect or the supply of a new, defect-free item. In the event of a remedy of the defect or a new delivery, we are obliged to bear all expenses involved in the supplementary performance, including but not limited to transport and travel expenses, labor and material costs, provided these are not increased by the circumstance that the purchased item has been relocated to a place other than the place of performance.

(3) If the supplementary performance fails, the customer can demand either withdrawal from the contract or a price reduction.

**§ 8 Liability**

(1) We are liable in accordance with the legal provisions if the customer claims damages due to the willful or gross negligent breach of contract by us or our representatives or agents. Unless we are accused of a willful breach of contract, our liability for damages is limited to foreseeable losses that typically occur in such cases.

(2) We are also liable in accordance with the legal provisions if we culpably infringe a cardinal obligation; in this case, our liability for damages is, however, again limited to foreseeable losses that typically occur. A contractual duty is deemed to be a cardinal obligation if the breach of duty relates to a duty which the customer relied on to be performed and was justified in relying thereon.

(3) To the extent that the customer is entitled to damages instead of the performance, our liability – also in the context of § 7 (3) – is limited to foreseeable losses that typically occur.

(4) If the delivered goods cannot be used in accordance with the contract through the fault of FLUX-GERÄTE GMBH as a result of suggestions and advice given before or after the contract was concluded not being implemented or being wrongly implemented or through the infringement of other contractually agreed secondary obligations – including but not limited to instructions for the operation and maintenance of the delivered goods – the rulings of §§ 8 et seq. apply by analogy, excluding further claims of the customer.

(5) We assume no liability for damage caused for the following reasons: unsuitable or incorrect use or storage, incorrect assembly/installation by the customer or third party, unauthorized repair attempts and modifications, natural wear and tear, faulty or careless handling, etc. on which we have no influence, as well as in the case of improper usage and non-compliance with our instructions for use. For safety reasons, products intended to be used in hazardous areas may only be opened and repaired by FLUX-GERÄTE GMBH or by a service partner authorized by FLUX-GERÄTE GMBH.

(6) In the absence of any provisions to the contrary above, liability shall be excluded.

(7) Warranty claims become statute barred after 12 months, beginning upon transfer of risk.

(8) In the event of a delivery recourse in accordance with Articles 478, 479 BGB, the statute of limitations remains unaffected; it is five years from the delivery of the deficient goods.

**§ 9 Joint liability**

(1) Liability for compensation for damages which goes beyond that envisaged under § 8 is excluded, regardless of the nature of the claim being asserted. This applies in particular to claims for damages arising from faults upon conclusion of contract, on account of other breaches of duty or on account of tort claims to compensation for property damages according to Article 823 BGB.

(2) The limitation as described under paragraph (1) above also applies if the customer demands reimbursement of needless expense instead of making a claim for compensation.

(3) If liability for compensation for damages against us is excluded or limited, this shall also apply with respect to the personal liability for damages of our employees, workers, co-workers, representatives, and agents.

**§ 10 Secrecy**

The customer is required to treat all information, know-how and other business secrets obtained in connection with the execution of each contract with strict confidentiality and is not permitted without the express approval of FLUX-GERÄTE GMBH to pass on any information, documents, documentation, drawings, sketches or other materials to third parties or otherwise to make such materials accessible. FLUX-GERÄTE GMBH also treats the documents of customers confidentially.

**§ 11 Court of competent jurisdiction – place of performance**

(1) For commercial customers, our registered office is the court of competent jurisdiction; we are, however, also entitled to sue the customer at the court competent for its place of domicile.

(2) The law of the Federal Republic of German applies; application of the United Nations Convention on Contracts for the International Sale of Goods (UN Purchasing Convention) is excluded.

(3) Unless otherwise stipulated in the order confirmation, our registered office is the place of performance.

01/2023

# For your notes

More than just pumps

FLUX is a world renowned brand for the highest standards in pump technology. It all began in 1950 with the invention of the electric drum pump. Today, FLUX offers a wide range of products which can be configured individually. For example, FLUX pumps are used in the chemical and pharmaceutical industries, in machine and plant construction, as well as in electroplating, sewage treatment plants, and the food industry.

Whether as a stand-alone or a system solution, FLUX quality means long useful life, excellent economic efficiency and a maximum of safety.

Apart from the outstanding FLUX product quality and reliability, our clients appreciate the expertise and dedication of our employees to customer service.

Today, FLUX-GERÄTE GMBH supplies pumps to almost one hundred countries world wide.

PL 0123 / 10-005 83 102 / 0,5-E printed in Germany

FLUX-GERÄTE GMBH
Talweg 12 · D-75433 Maulbronn
Tel +49 7043 101-0 · Fax +49 7043 101-444
info@flux-pumpen.de · www.flux-pumps.com